File No.	060	SHEET 1 / 1

SPECIFICATIONS

Rating:100V DC 1A Max.
Dielectric Strength:250V AC/1 Min.
Insulation Resistance:100Megohms Min.At 500V DC
A)Boot:PVC
B)Metal Part:Steel,Nickel Plated
C)Insulator:PBT
D)Pin Contact:Brass Nickel Plated

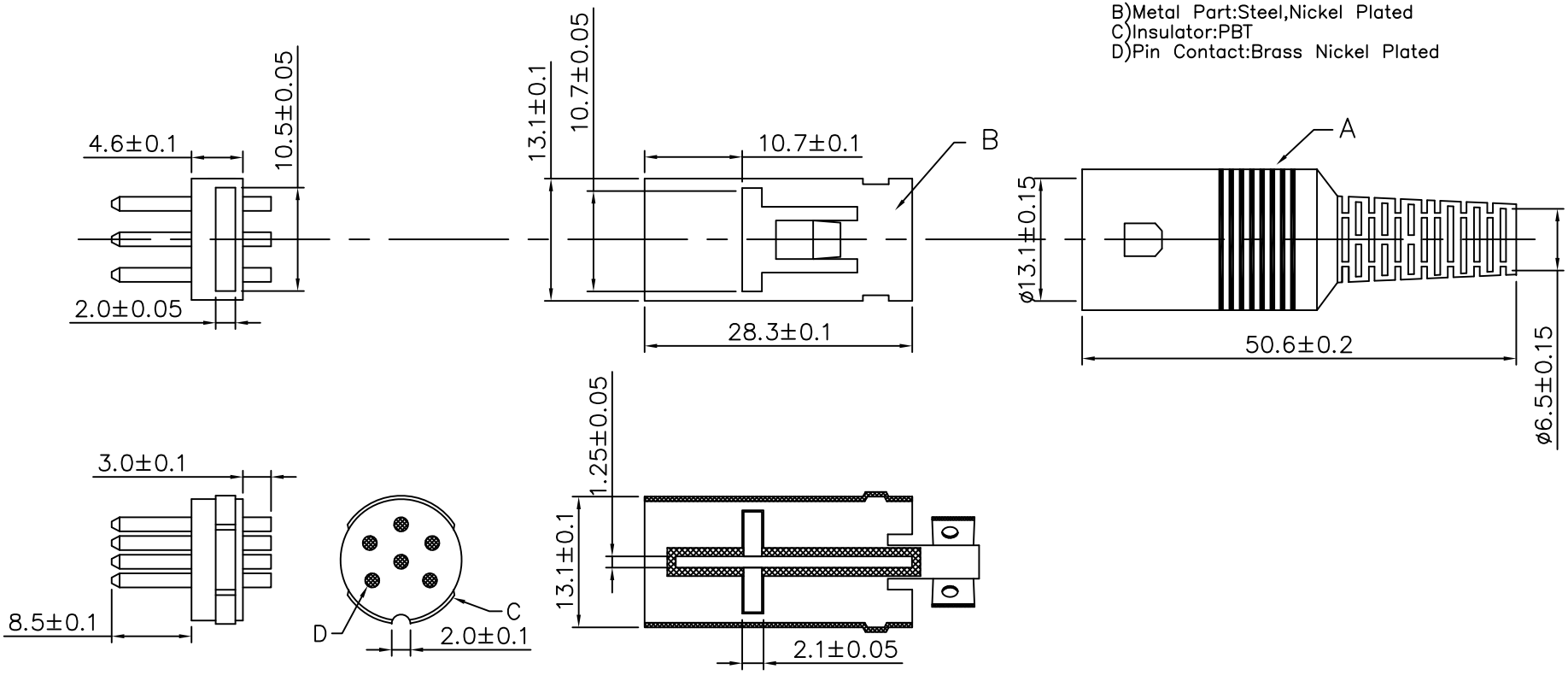

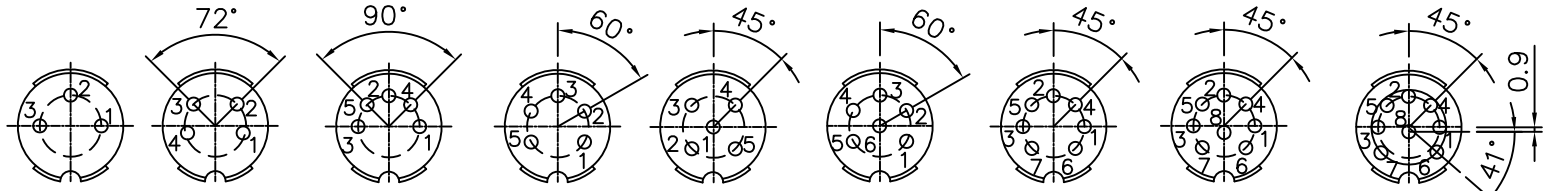

3P 180° 4P 210° 5P 180° 5P 240° 5P 360° 6P 240° 7P 270° 8P 270° 8P 262°

A MEMBER OF AUK GROUP
太聯事業股份有限公司
AUK CONTRACTORS CO., LTD.

CATEGORY		APPROVED BY	MEI	UNLESS OTHERWISE SPECIFIED TOLERANCES ARE .X ±0.1 .XX ±0.05 AWG.
PART No.	DAXXP	CHECKED BY	RAN	
DRAWING No.	DAXXP	DRAWING BY	LXH	
SCALE	NONE	REV.	B0	UNIT mm

NO.	REV.	REVISIONS	CHK	DATE
0	B0	NEW RELEASE	HZF	05/03/2007