RED INDICATES ORIGINAL

DATA CONTAINED IN THIS DOCUMENT IS PROPRIETARY TO TROMPETER ELECTRONICS INC. AND SHALL NOT BE DISCLOSED, COPIED OR USED FOR PROCUREMENT OR MANUFACTURE WITHOUT EXPRESS WRITTEN PERMISSION.

REVISIONS					1-0454	SH 1C
REV	ECO	DESCRIPTION	DWN	APPROVED	DATE	
D	12637	DELETED: -15 BRASS CHAIN ADDED: -15,-18 AND -17 SST ROPE SEE ECO	R L		1/27/99	

TABLE 1	
DASH NO	DESCRIPTION
-1	CAP (NO CHAIN)
-2	CAP WITH 2.50 BRASS CHAIN
-3	CAP WITH 2.50 NYLON CHAIN
-4	CAP WITH 3.00 BRASS CHAIN
-5	CAP WITH 3.00 NYLON CHAIN
-6	CAP WITH 6.00 BRASS CHAIN
-7	CAP WITH 6.00 NYLON CHAIN
-8	CAP WITH 4.00 BRASS CHAIN
-9	CAP WITH 4.00 NYLON CHAIN
-10	CAP WITH 10.00 BRASS CHAIN
-11	CAP WITH 10.00 NYLON CHAIN
-12	CAP WITH 2.50 SST ROPE
-13	CAP WITH 3.00 SST ROPE
-14	CAP WITH 8.00 SST ROPE
-15	CAP WITH 4.00 SST ROPE
-16	CAP WITH 7.00 SST ROPE
-17	CAP WITH 4.50 SST ROPE

TABLE 2				
DASH NO	"A" DIA	"B" DIA	"C" DIM	"D" DIM
-01	.755	.875	1.191	.513
-02	.630	.750	1.066	.450
-03	.505	.625	.941	.388
-04	.439	.562	.878	.355
-05	.380	.500	.816	.325
-06	.317	.437	.753	.295
-07	.281	.406	.722	.278
-08	.610	.750	1.066	.450
-09	.567	.687	1.003	.418
-009	.330	.450	.788	.300

INCH	MM	INCH	MM	INCH	MM	INCH	MM
.005	0.13	.330	8.38	.567	14.40	.941	23.90
.010	0.25	.355	9.02	.602	15.29	1.003	25.48
.030	0.76	.380	9.65	.610	15.49	1.066	27.08
.032	0.81	.388	9.85	.625	15.88	1.191	30.25
.140	3.56	.406	10.31	.630	16.00	1.300	33.02
.200	5.08	.419	10.64	.687	17.45	1.362	34.59
.25	6.35	.437	11.10	.722	18.34	2.5	63.50
.278	7.06	.439	11.15	.750	19.05	3.0	76.20
.281	7.14	.450	11.43	.753	19.13	4.0	101.60
.290	7.37	.500	12.70	.755	19.18	4.50	114.30
.295	7.49	.505	12.83	.768	19.46	6.0	152.40
.300	7.62	.513	13.03	.816	20.73	7.00	177.80
.317	8.05	.56	14.22	.875	22.23	10.0	254.00
.325	8.26	.562	14.27	.878	22.30		

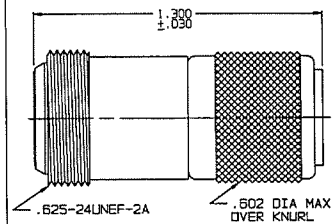

-1 SHOWN

NO CHAIN/ROPE OR MOUNTING LUG

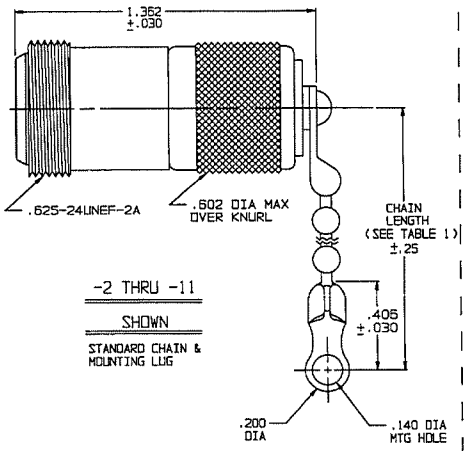

-2 THRU -11

SHOWN

STANDARD CHAIN & MOUNTING LUG

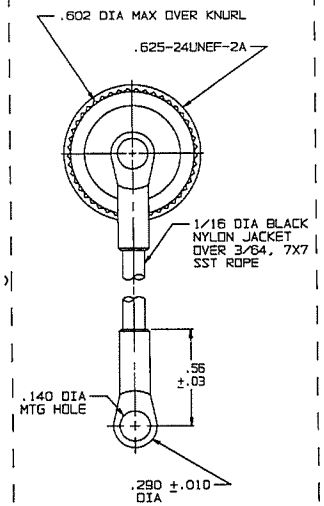

-12 THRU

-17 SHOWN

STAINLESS STEEL ROPE AND MOUNTING LUG

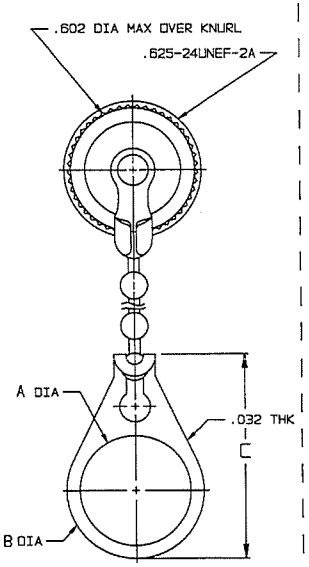

-2-01 THRU -11-008

SHOWN

STANDARD CHAIN AND BULKHEAD JACK MOUNTING LUG

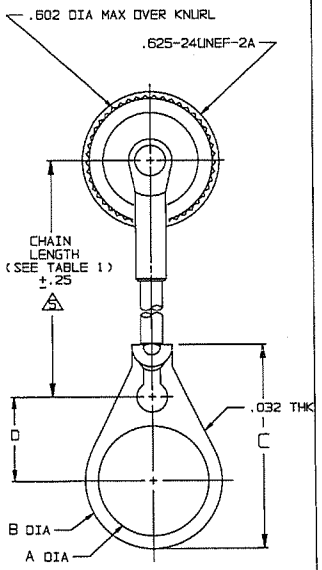

-12-01 THRU

-17-008 SHOWN

SST ROPE AND BULKHEAD JACK MOUNTING LUG

5 NOTE THAT CHAIN LENGTH FOR SST ROPE WITH MOUNTING OPTION IS NOT MEASURED TO CENTER OF BULKHEAD MOUNTING LUG

4. EXAMPLE OF COMPLETE MODEL NO:

RFI97 - 2 - 01

- RFI97: BASIC MODEL NO
- 2: CHAIN/ROPE MATL & LENGTH (SEE TABLE 1)
- 01: BULKHEAD JACK MOUNTING LUG (OPTIONAL) (SEE TABLE 2)

3. "N" SERIES RFI/DUST CAP WITH CHAIN OR JACKETED STAINLESS STEEL ROPE
2. FINISH: TFS-1A (NICKEL)
1. ALL DIMENSIONS ARE IN INCHES

QTY	DESCRIPTION			PART NUMBER	ITEM
TOL UNLESS SPECIFIED .XX ± .XXX ±.005 .XXXX ± ANGLES±	TROMPETER ELECTRONICS, INC.			RFI97	
DWN	R L	1/11/99	MATERIAL	CODE IDENT	DRAWING NO.	REV
CHK	JR	1/23/99	—	14949	1-0454	D
ENGR						
NEXT ASSY	APPR	1-29-99	SCALE 4/1	DATE 6-12-79	SHEET 1C	