Micro Relay A/VFMA

- **High current version with limiting continuous current 30A at 85°C**
- **Pin assignment according to ISO 7588 part 3**
- **Customized versions on request**
  - **– 24VDC versions with special contact gap**
  - **– Integrated components (e.g. diode)**
  - **– Customized marking**
  - **– Special covers (e.g. notches, release features)**
  - **– For latching version refer to Micro Relay Latching**
  - **– For low noise version refer to Micro Relay Low Noise**
  - **– For high current version refer to part number table**

Typical applications
Cross carline up to 30A for example: ABS control, blower fans, cooling fan, door control, door lock, fuel pump, heated front screen, immobilizer, interior lights, seat control, seatbelt pretensioner, sun roof, trunk lock, valves, window lifter, wiper control.

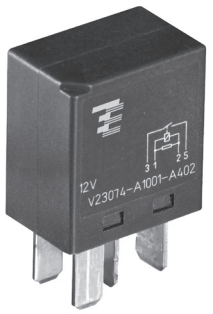

F074_fcw1_bw

FVFMA_fcw1c

Contact Data	Form A Standard		Form C		Form A HC	Form C HC
Contact arrangement	1 form A, 1 NO	1 form A, 1 NO	1 form C, 1 CO	1 form C, 1 CO	1 form A, 1 NO	1 form C 1 CO
Rated voltage	12VDC	24VDC	12VDC	24VDC[6]	12VDC	12VDC
Limiting continuous current, form A/form B		NO/NC	NO/NC			
23°C	30A	30A	30/20A	30/20A	35A	35/25A
85°C	25A	25A	25/15A	25/15A	30A	30/20A
125°C	10A	10A	10/8A	10/8A	15A	15/10A
Limiting making current[1)2)], A/B (NO/NC)	120A	120A	120/40A	120/20A	120A	120/40A
Limiting breaking current	30A	20A	30/15A	20/10A	30A	30/20A
Limiting short-time current, overload current, ISO 8820-3[3)]	1.35 x 25A, 1800s 2.00 x 25A, 5s 3.50 x 25A, 0.5s 6.00 x 25A, 0.1s		1.35 x 25A, 1800s 2.00 x 25A, 5s 3.50 x 25A, 0.5s 6.00 x 25A, 0.1s		1.35 x 30A, 1800s 2.00 x 30A, 5s 3.50 x 30A, 0.5s 6.00 x 30A, 0.1s	
Jump start test	24VDC for 5min conducting nominal current at 23°C					
Contact material	silver based					
Min. recommended contact load[4)]	1A at 5VDC					
Initial voltage drop						
NO contact at 10A, typ./max.	15/200mV					
NC contact at 10A, typ./max.	20/250mV					
Frequency of operation	6 ops./min (0.1Hz)					
Electrical endurance[5)]						
resistive load at 14VDC	>1x10^5 ops. 25A		>1x10^5 ops. 25A (NO)		>1x10^5 ops. 30A	
resistive load at 28VDC		>1x10^5 ops. 15A		>1x10^5 ops. 15A (NO) >1x10^5 ops. 10A (NC)		
Mechanical endurance	typ. 10^7 ops.					

Max. DC load breaking capacity

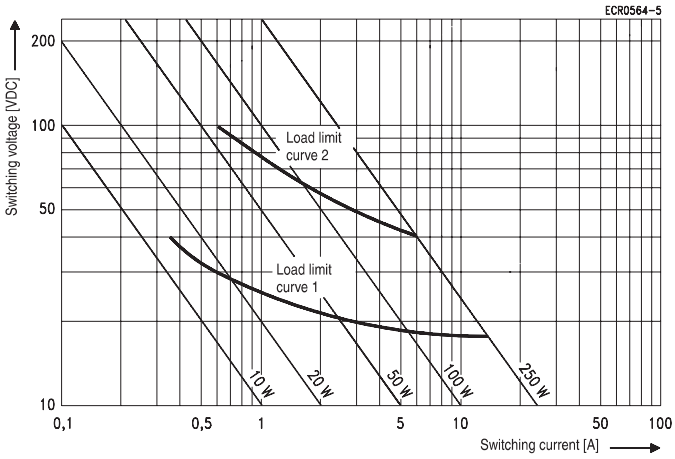

1) The values apply to a resistive or inductive load with suitable spark suppression and at maximum 13.5VDC for 12VDC or 27VDC for 24VDC load voltages.
2) For a load current duration of maximum 3s for a make/break ratio of 1:10.
3) Current and time are compatible with circuit protection by a typical automotive fuse. Relay will make, carry and break the specified current.
4) See chapter Diagnostics of Relays in our Application Notes or consult the internet at http://relays.te.com/appnotes/
5) Electrical endurance data is not valid for diode versions. Any diode or pn-junction parallel to the coil (internal or external) will significantly decrease the electrical lifetime, especially when used for inductive loads.
6) Not applicable for polarity reverse loads like power windows

Load limit curve 1: arc extinguishes during transit time (CO contact).
Load limit curve 2: safe shutdown, no stationary arc (NO contact).
Load limit curves measured with low inductive resistors verified for 1000 switching events.

12-2017, Rev. 1217
www.te.com
© 2017 Tyco Electronics Corporation,
a TE Connectivity Ltd. company.

Datasheets and product specification according to IEC 61810-1 and to be used only together with the 'Definitions' section.

Datasheets and product data is subject to the terms of the disclaimer and all chapters of the 'Definitions' section, available at http://relays.te.com/definitions

Datasheets, product data, 'Definitions' section, application notes and all specifications are subject to change.

Micro Relay A/VFMA (Continued)

Coil Data

Coil voltage range	12/24VDC

Coil versions, DC coil

Coil code	Rated voltage VDC	Operate voltage VDC	Release voltage VDC	Coil resistance[7] Ω±10%	Rated coil power[7] W
001	12	7.2	1.6	119	1.20
002	24	14.4	3.6	430	1.34
005	12	7.2	1.6	144	1.00
F	12	7.2	1.2	90	1.60
H	24	14.4	3.6	430	1.34

All figures are given for coil without pre-energization, at ambient temperature +23°C.
7) Without components in parallel.

Coil operating range

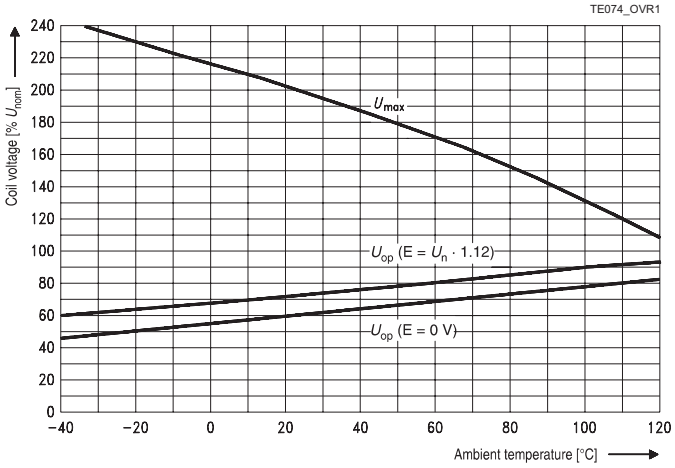

Does not take into account the temperature rise due to the contact current
E = pre-energization.

Insulation Data

Initial dielectric strength	
between open contacts	$500VAC_{rms}$
between contact and coil	$500VAC_{rms}$
Load dump test	
ISO 7637-1 (12VDC), test pulse 5	Vs=+86.5VDC
ISO 7637-2 (24VDC), test pulse 5	Vs=+200VDC

Other Data

EU RoHS/ELV compliance	compliant
Ambient temperature	-40 to +125°C
Climatic cycling with condensation, EN ISO 6988	6 cycles, storage 8/16h
Temperature cycling, IEC 60068-2-14, Nb	10 cycles, -40/+85°C (5°C/min)
Damp heat cyclic, IEC 60068-2-30, Db, Variant 1	6 cycles, upper air temp. 55°C
Damp heat constant, IEC 60068-2-3 (78), Ca	56 days
Category of environmental protection, IEC 61810	RT I – dustproof
Degree of protection, IEC 60529	IP54
Corrosive gas	
IEC 60068-2-42	$10±2cm^3/m^3$ SO_2, 10 days
IEC 60068-2-43	$1±0.3cm^3/m^3$ H_2S, 10 days
Vibration resistance (functional)	
IEC 60068-2-6 (sine sweep)	10 to 500Hz min. 5g[8]
Shock resistance (functional)	
IEC 60068-2-27 (half sine)	min. 20g 11ms[8]
Drop test, free fall, IEC 60068-2-32	1m onto concrete
Terminal type	plug-in, QC
Cover retention	
axial force	150N
pull force	150N
push force	200N
Terminal retention	
pull force	100N
push force	100N
resistance to bending	10N[9]
force applied to side	10N[9]
torque	0.3Nm
Weight	approx. 16 to 20g (0.5 to 0.7oz)
Packaging unit	
Micro A	480 pcs.
VFMA	600 pcs.

8) No change in the switching state >10µs. Valid for NC contacts, NO contact values significantly higher.
9) Values apply 2mm from the end of the terminal. When the force is removed, the terminal must not have moved by more than 0.3mm

Accessories

For details see datasheet	Connectors for Micro ISO Relays

Terminal Assignment

NOD
1 form A, 1 NO with diode

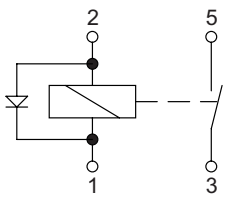

NOR
1 form A, 1 NO with resistor

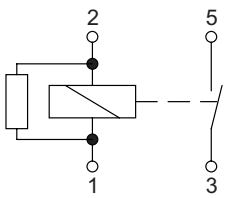

COD
1 form C, 1 CO with diode

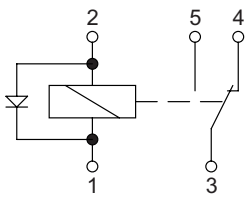

COR
1 form C, 1 CO with resistor

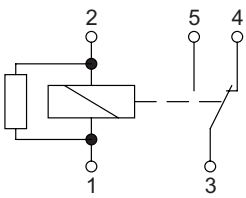

12-2017, Rev. 1217
www.te.com
© 2017 Tyco Electronics Corporation,
a TE Connectivity Ltd. company.

Datasheets and product specification according to IEC 61810-1 and to be used only together with the 'Definitions' section.

Datasheets and product data is subject to the terms of the disclaimer and all chapters of the 'Definitions' section, available at http://relays.te.com/definitions

Datasheets, product data, 'Definitions' section, application notes and all specifications are subject to change.

Micro Relay A/VFMA (Continued)

Dimensions

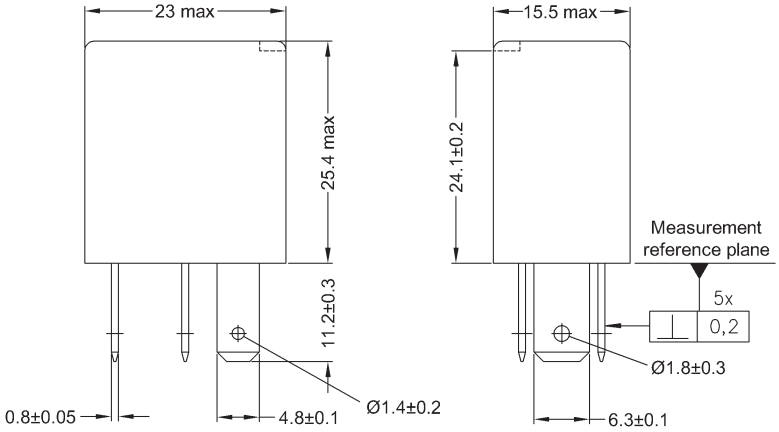

Quick connect terminal similar to ISO 8092-1.
Micro A: Terminals without holes
VFMA: Terminals with holes

View of the terminals (bottom view)

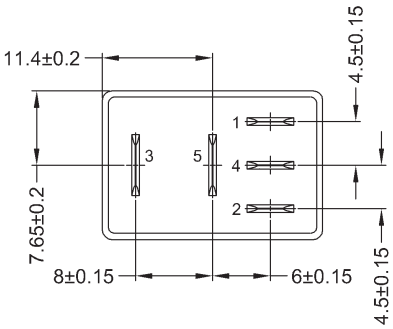

Positional tolerances: ⌖ 0,15

12-2017, Rev. 1217
www.te.com
© 2017 Tyco Electronics Corporation,
a TE Connectivity Ltd. company.

Datasheets and product specification according to IEC 61810-1 and to be used only together with the 'Definitions' section.

Datasheets and product data is subject to the terms of the disclaimer and all chapters of the 'Definitions' section, available at http://relays.te.com/definitions

Datasheets, product data, 'Definitions' section, application notes and all specifications are subject to change.

Micro Relay A/VFMA (Continued)

Product code structure

Typical product code: **V23074 -A 1 001 -A4 02**

Type
- **V23074** Micro Relay A

Version
- **A** Standard
- **H** High current

Coil suppression
- **1** Resistor
- **2** Diode

Coil
- **001** 12VDC
- **002** 24VDC
- **005** 12VDC for high current version

Contact material
- **-A4** Silver based
- **-A5** Silver based for high current version

Contact arrangement
- **02** 1 form A, 1 NO
- **03** 1 form C, 1 CO

Product code structure

Typical product code: **VFMA -1 1 F 4 1 -S01**

Type
- **VFMA** VFMA Series

Version
- **1** Standard

Contact arrangement
- **1** 1 form A, 1 NO
- **5** 1 form C, 1 CO

Coil
- **F** 12VDC
- **H** 24VDC

Contact material
- **4** Silver based
- **7** Silver based for high current version

Terminals
- **1** Plug-in

Coil suppression
- **S01** Resistor

Product code	Equivalent to	Version	Coil suppr.	Cir-cuit[1]	Cover Color	Coil	Arrange-ment	Termi-nals	Part number
V23074-A1001-A402	VFMA-11F41-S01	Standard	Resistor 680Ω	NOR	Black	12VDC	1 form A, 1 NO	Plug-in, QC	4-1904124-2
VFMA-11F41-S01	V23074-A1001-A402								9-1393292-9
V23074-A1001-A403	VFMA-15F41-S01			COR			1 form C, 1 CO		4-1904124-3
VFMA-15F41-S01	V23074-A1001-A403								1393293-8
V23074-A2001-A402	V23074-A2201-X147		Diode	NOD			1 form A, 1 NO		5-1393292-8
V23074-A2201-X147	V23074-A2001-A402				Blue				5-1904135-9
V23074-A2001-A403	V23074-A2101-X148			COD	Black		1 form C, 1 CO		6-1419137-4
V23074-A2101-X148	V23074-A2001-A403				Red				6-1904135-0
V23074-H1005-A502		High current	Resistor 1000Ω	NOR	Black		1 form A, 1 NO		4-1904124-4
V23074-A1002-A402	VFMA-11H41-S01	Standard	Resistor 1800Ω			24VDC			8-1393292-9
VFMA-11H41-S01	V23074-A1002-A402								6-1415008-2
V23074-A1002-A403				COR			1 form C, 1 CO		3-1393292-8
V23074-A2002-A402			Diode	NOD			1 form A, 1 NO		6-1393292-2
V23074-A2002-A403				COD			1 form C, 1 CO		6-1393292-3

1) See terminal assignment diagrams.
Other types on request.
This list represents the most common types and does not show all variants covered by this datasheet.

Production in Asia (only)

Product code	Version	Coil suppression	Circuit[1]	Cover Color	Coil	Arrange-ment	Termi-nals	Part number
V23074-A1001-A402	Standard	Resistor 680Ω	NOR	Black	12VDC	1 form A, 1 NO	Plug-in, QC	1393292-5
V23074-A1001-A403			COR			1 form C, 1 CO		8-1393292-4
V23074-A2001-A402		Diode	NOD			1 form A, 1 NO		2-1904111-7
V23074-A2001-A403			COD			1 form C, 1 CO		9-1904105-7
V23074-H1005-A502	High current	Resistor 1000Ω	NOR			1 form A, 1 NO		2-1414971-4

1) See terminal assignment diagrams.
Other types on request.
This list represents the most common types and does not show all variants covered by this datasheet.

12-2017, Rev. 1217
www.te.com
© 2017 Tyco Electronics Corporation,
a TE Connectivity Ltd. company.

Datasheets and product specification according to IEC 61810-1 and to be used only together with the 'Definitions' section.

Datasheets and product data is subject to the terms of the disclaimer and all chapters of the 'Definitions' section, available at http://relays.te.com/definitions

Datasheets, product data, 'Definitions' section, application notes and all specifications are subject to change.

Mouser Electronics

Authorized Distributor

Click to View Pricing, Inventory, Delivery & Lifecycle Information:

TE Connectivity:

4-1904124-3