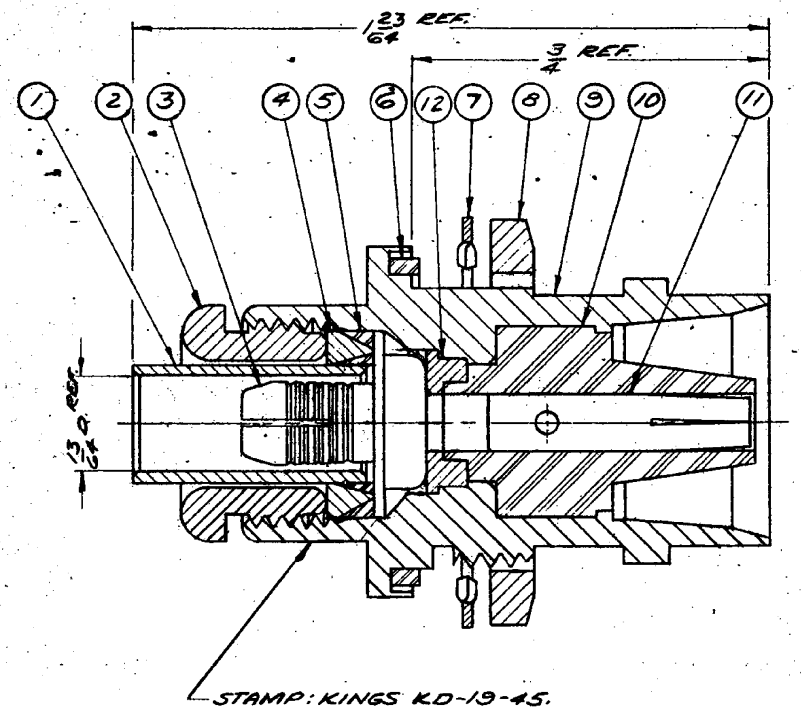

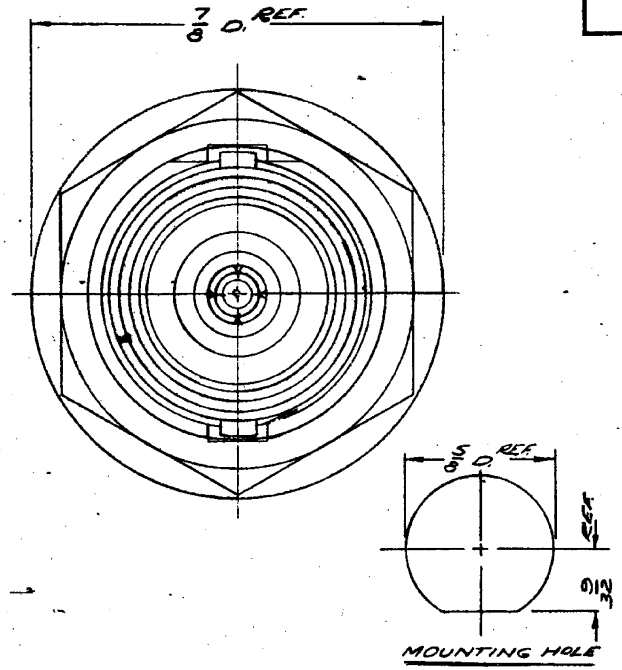

KD-19-45

NOTES:
1. FOR USE WITH RG-58, 58A, 58C & 141/U CABLE.
2. FOR CABLE TRIMMING USE KTJ-18 & KTD-88.
3. FOR CRIMPING USE DIE SIZE 01.
4. FOR CABLING INSTRUCTIONS SEE CP-202A.

ITEM	REQ'D	DESCRIPTION	DWG. NO.
12	1	BUSHING	
11	1	CONTACT	704-3-M07
10	1	INSULATOR	
9	1	BODY	
8	1	HEX. NUT	D-19-45-2-MC7
7	1	LOCKWASHER	30C-6-MC7
6	1	GASKET	631-8-M99
5	1	GASKET	704-6-M99
4	1	GLAND	S-89-32-1-MC7
3	1	K-GRIP	N-59-29-1-MC7
2	1	CLAMP NUT	631-4-MC7
1	1	K-GRIP SLEEVE	N-59-29-2-MC7

UNLESS OTHERWISE SPECIFIED:

1. TOLERANCES:
   FRACTIONS ± .010 DECIMALS ± .004 ANGLES ± 0° 30'
   T. I. R. CONCENTRICITY OF ANY 2 DIAMETERS MAY NOT EXCEED THE SUM OF THEIR TOLERANCES.
2. REMOVE ALL BURRS, BREAK SHARP EDGES .003 MAX.
3. NO FILLETS PERMITTED.
4. SURFACE ROUGHNESS 63 MICROINCHES RMS MAX.
5. ALL DIMENSIONS PRIOR TO PLATING.

DIETZGEN 1988M Ageproof Tracing Vellum 8015

REVISIONS	
ISSUE	CHANGES

REF:
FINISH
SPEC.
MATL.
SPEC.

C BULKHEAD JACK

DRAWN A.T. DATE 12 JAN. 66
APPR. L.I. DATE 13 JAN 66

KINGS ELECTRONICS
40 MARBLEDALE ROAD
TUCKAHOE, N. Y.

KD-19-45

S-D

S-D

MAY 2007 THIS DRAWING BECAME THE PROPERTY OF PROPERTY OF
WINCHESTER ELECTRONICS CORPORATION, WALLINGFORD, CT 06492