Rev	AWO #	Description	Date	Appr
-		RELEASED	10/27/10	

APPROVED: _____

DATE: _____ TITLE: _____

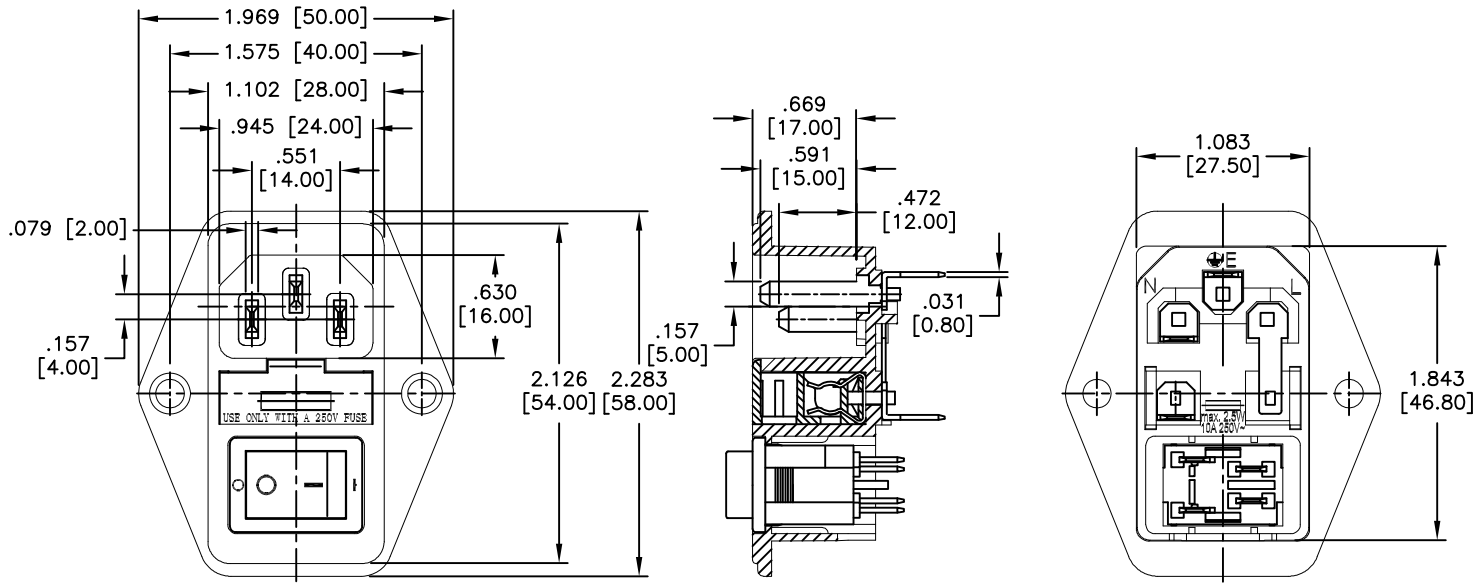

RECOMMENDED PANEL CUT–OUT

SPECIFICATIONS:

Material:

Insulator: Thermoplastic, glass reinforced, rated UL 94V–0

Insulator color: Black

Contacts: Brass

Plating:

Tin over Copper underplate overall

Electrical:

Operating voltage: 250 VAC

Current rating: UL & CSA: 15 Amps max

VDE: 10 Amps max

Insulation resistance: 100 Mohms min @ 500 VDC

Dielectric withstanding voltage: 2,000 VAC for 1 minute

Temperature Rating:

Operating temperature: –25°C to +70°C

Environmental:

Lead free, RoHS compliant

Recommended soldering temp: 235°C for 5 seconds

RoHS COMPLIANT

UNLESS OTHERWISE SPECIFIED
ALL DIMENSIONS ARE INCHES [MM]
TOLERANCES: EXCEPT AS NOTED

INCHES		HOLES	
.X	± .10	Ø.X	±.10
.XX	± .020	Ø.XX	±.015
.XXX	± .015	Ø.XXX	±.010

APPROVALS		DATE
DRAWN	AY	10/27/10
CHECKED	AH	10/27/10
APPROVED		

ADAM TECH

909 Rahway Avenue, Union, NJ 07083

Phone: 908-687-5000 Fax: 908-687-5710

TITLE: IEC MALE, FUSED INLET WITH SWITCH SCREW ON PANEL MOUNT

SIZE	PART NO.	REV.
X	IEC-FS-1	-

REF: S00060T | SCALE: NTS | SHEET 1 OF 1