DUAL BILATERAL ANALOG SWITCH

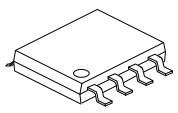

SOP-8

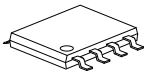

TSSOP-8

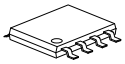

MSOP-8

■ DESCRIPTION

The **U74LVC2G66** is a dual bilateral analog switch which is designed for 1.65V to 5.5V operation. This switch can handle both analog and digital signals and permits signals with amplitudes of up to 5.5 V (peak) to be transmitted in either direction. Each switch section has enable-input control (C). If the voltage applied to C is at high-level, the associated switch section is turned on.

■ FEATURES

* Wide Supply Voltage Range from 1.65V to 5.5V
* Up to 5.5V Inputs Accept Voltages
* Max t_{PD} of 0.8 ns at 3.3V
* High ON-OFF Output Voltage Ratio
* High Degree Of Linearity
* High Speed, Typically 0.5 ns at V_{CC} = 3 V, C_L = 50 pF
* Rail-to-Rail Input/Output
* Low On-State Resistance, Typically 6 Ω at V_{CC} = 4.5 V

■ ORDERING INFORMATION

Ordering Number		Package	Packing
Lead Free	Halogen Free		
U74LVC2G66L-S08-T	U74LVC2G66G-S08-T	SOP-8	Tube
U74LVC2G66L-S08-R	U74LVC2G66G-S08-R	SOP-8	Tape Reel
U74LVC2G66L- SM1-T	U74LVC2G66G-SM1-T	MSOP-8	Tube
U74LVC2G66L- SM1-R	U74LVC2G66G- SM1-R	MSOP-8	Tape Reel
U74LVC2G66L-P08-T	U74LVC2G66G-P08-T	TSSOP-8	Tube
U74LVC2G66L-P08-R	U74LVC2G66G-P08-R	TSSOP-8	Tape Reel

U74LVC2G66L-S08-T (1) Packing Type (2) Package Type (3) Lead Free	(1) T: Tube, R: Tape Reel (2) S08: SOP-8, SM1: MSOP-8, P08: TSSOP-8 (3) L: Lead Free, G: Halogen Free

Copyright © 2014 Unisonic Technologies Co., Ltd

■ MARKING INFORMATION

PACKAGE	MARKING
SOP-8/MSOP-8	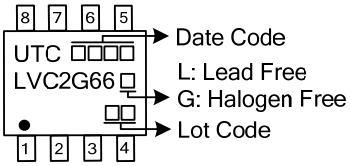
TSSOP-8	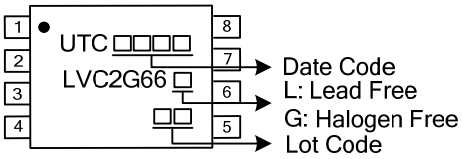

■ PIN CONFIGURATION

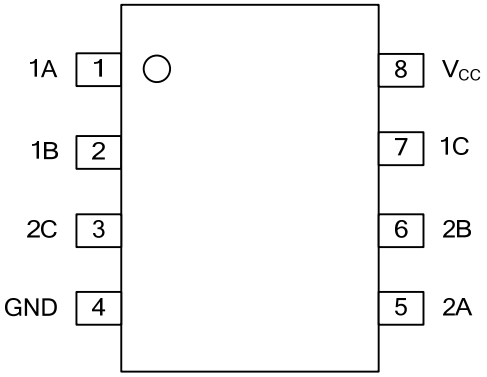

■ FUNCTION TABLE (Each Gate)

CONTROL INPUT (C)	SWITCH
L	Off
H	On

■ LOGIC DIAGRAM (Positive Logic)

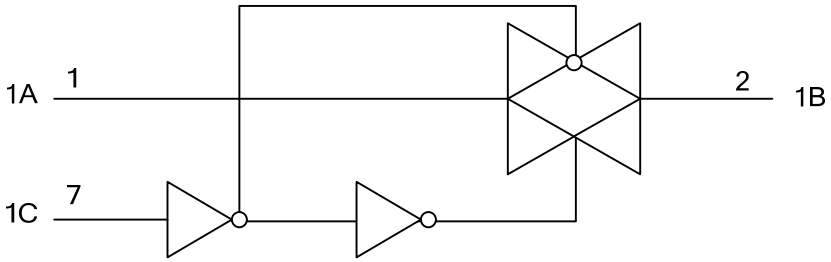

One of two switches

■ ABSOLUTE MAXIMUM RATING (Unless otherwise specified)

PARAMETER	SYMBOL	RATINGS	UNIT
Supply Voltage	V_{CC}	-0.5~6.5	V
Input Voltage	V_{IN}	-0.5~6.5	V
Switch I/O Voltage	V_{OUT}	-0.5~V_{CC}+0.5	V
Control Input Clamp Current	I_{IK}	-50	mA
I/O Port Diode Current	$I_{I/OK}$	-50	mA
On-State Switch Current	I_{OUT}	±50	mA
V_{CC} or GND Current	I_{CC}	±100	mA
Storage Temperature	T_{STG}	-65 ~ +150	°C

Note: 1. The input and output voltage ratings may be exceeded if the input and output current ratings are observed.
2. Absolute maximum ratings are those values beyond which the device could be permanently damaged. Absolute maximum ratings are stress ratings only and functional device operation is not implied.

■ THERMAL DATA

PARAMETER		SYMBOL	RATINGS	UNIT
Junction to Ambient	SOP-8	θ_{JA}	150	°C /W
	MSOP-8		220	
	TSSOP-8		190	

■ RECOMMENDED OPERATING CONDITIONS

PARAMETER	SYMBOL	CONDITIONS	MIN	TYP	MAX	UNIT
Supply Voltage	V_{CC}	Operating	1.65		5.5	V
I/O Port Voltage	$V_{I/O}$		0		V_{CC}	V
High-Level Input Voltage, Control Input	V_{IH}	V_{CC} = 1.65V to 1.95V	0.65×V_{CC}			V
		V_{CC} = 2.3V to 2.7V	0.7×V_{CC}			
		V_{CC} = 3V to 3.6V	0.7×V_{CC}			
		V_{CC} = 4.5V to 5.5V	0.7×V_{CC}			
Low-Level Input Voltage, Control Input	V_{IL}	V_{CC} = 1.65V to 1.95V			0.35×V_{CC}	V
		V_{CC} = 2.3V to 2.7V			0.3×V_{CC}	
		V_{CC} = 3V to 3.6V			0.3×V_{CC}	
		V_{CC} = 4.5V to 5.5V			0.3×V_{CC}	
Control Input Voltage	V_{IN}		0		5.5	V
Input Transition Rise or Fall Rate	t_R / t_F	V_{CC} = 1.65V to 1.95V			20	ns/V
		V_{CC} = 2.3V to 2.7V			20	
		V_{CC} = 3V to 3.6V			10	
		V_{CC} = 4.5V to 5.5V			10	
Operating Temperature	T_{OPR}		-40		85	°C

■ ELECTRICAL CHARACTERISTICS (T_A =25°C , unless otherwise specified)

PARAMETER	SYMBOL	TEST CONDITIONS		MIN	TYP	MAX	UNIT
On-State Switch Resistance	r_{ON}	V_{IN} =V_{CC} or GND, V_C = V_{IH}, (see Fig.1)	I_S = 4mA, V_{CC} = 1.65 V		12.5	30	Ω
			I_S = 8mA, V_{CC} = 2.3 V		9	20	
			I_S = 24mA, V_{CC} = 3 V		7.5	15	
			I_S = 32mA, V_{CC} = 4.5 V		6	10	
Peak On-State Resistance	$r_{ON(P)}$	V_{IN} =V_{CC} to GND, V_C = V_{IH}, (see Fig.1)	I_S = 4mA, V_{CC} = 1.65 V		85	120	Ω
			I_S = 8mA, V_{CC} = 2.3 V		22	30	
			I_S = 24mA, V_{CC} = 3 V		12	20	
			I_S = 32mA, V_{CC} = 4.5 V		7.5	15	
Difference of On-State Resistance Between Switches	Δr_{ON}	V_{IN} =V_{CC} to GND, V_C = V_{IH}, (see Fig.1)	I_S = 4mA, V_{CC} = 1.65 V			7	Ω
			I_S = 8mA, V_{CC} = 2.3 V			5	
			I_S = 24mA, V_{CC} = 3 V			3	
			I_S = 32mA, V_{CC} = 4.5 V			2	
Off-State Switch Leakage Current	$I_{S(OFF)}$	V_{IN} = V_{CC} and V_{OUT} = GND or V_{IN} = GND and V_{OUT} = V_{CC}, V_C = V_{IL}, V_{CC} = 5.5V (see Figure 2)				±0.1	μA
On-State Switch Leakage Current	$I_{S(On)}$	V_{IN} = V_{CC} or GND, V_C = V_{IH}, V_{OUT} = Open, V_{CC} = 5.5V (see Figure 3)				±0.1	μA
Control Input Current	I_{IN}	V_C = V_{CC} or GND, V_{CC} = 5.5V				±0.1	μA
Quiescent Supply Current	I_Q	V_C = V_{CC} or GND, V_{CC} = 5.5V				1	μA
Additional Quiescent Supply Current	ΔI_Q	One input at V_{CC} – 0.6V; V_{CC}= 5.5V; other inputs at V_{CC} or GND				500	μA
Control Input Capacitance	C_{IN}	V_{CC} = 5.0V			3.5		pF
Switch Input/Output Capacitance	$C_{IO(OFF)}$	V_{CC} = 5.0V			6		pF
Switch Input/Output Capacitance	$C_{IO(ON)}$	V_{CC} = 5.0V			14		pF

■ SWITCHING CHARACTERISTICS (T_A =25°C)

PARAMETER	SYMBOL	TEST CONDITIONS		MIN	TYP	MAX	UNIT
Propagation Delay From Input (A or B) to Output (B or A)	t_{PLH} / t_{PHL} (t_{PD})	V_{CC}=1.8±0.15V, R_L=1KΩ	C_L=30pF			2	ns
		V_{CC}=2.5±0.2V, R_L=500Ω				1.2	
		V_{CC}=3.3±0.3V, R_L=500Ω	C_L=50pF			0.8	
		V_{CC}=5.0±0.5V, R_L=500Ω				0.6	
Propagation Delay From Input (C) to Output (A or B)	t_{PZL} / t_{PZH} (t_{EN})	V_{CC}=1.8±0.15V, R_L=1KΩ	C_L=30pF	2.3		10	ns
		V_{CC}=2.5±0.2V, R_L=500Ω		1.6		5.6	
		V_{CC}=3.3±0.3V, R_L=500Ω	C_L=50pF	1.5		4.4	
		V_{CC}=5.0±0.5V, R_L=500Ω		1.3		3.9	
Propagation Delay From Input (C) to Output (A or B)	t_{PLZ} / t_{PHZ} (t_{DIS})	V_{CC}=1.8±0.15V, R_L=1KΩ	C_L=30pF	2.5		10.5	ns
		V_{CC}=2.5±0.2V, R_L=500Ω		1.2		6.9	
		V_{CC}=3.3±0.3V, R_L=500Ω	C_L=50pF	2		7.2	
		V_{CC}=5.0±0.5V, R_L=500Ω		1.1		6.3	

■ ANALOG SWITCHING CHARACTERISTICS (T_A =25°C) (Note)

PARAMETER	SYMBOL	TEST CONDITIONS		MIN	TYP	MAX	UNIT
Frequency Response (Switch On) From Input (A or B) to Output (B or A)		C_L = 50 pF, R_L = 600 Ω, f_{IN} = sine wave (see Fig.4)	V_{CC} = 1.65 V		35		ns
			V_{CC} = 2.3 V		120		
			V_{CC} = 3 V		175		
			V_{CC} = 4.5 V		195		
		C_L = 5 pF, R_L = 50 Ω, f_{IN} = sine wave (see Fig.4)	V_{CC} = 1.65 V		>300		
			V_{CC} = 2.3 V		>300		
			V_{CC} = 3 V		>300		
			V_{CC} = 4.5 V		>300		
Crosstalk (Note) (Between Switches) From Input (A or B) to Output (B or A)		C_L = 50 pF, R_L = 600 Ω, f_{IN} = 1 MHz (sine wave) (see Fig.6)	V_{CC} = 1.65 V		-58		dB
			V_{CC} = 2.3 V		-58		
			V_{CC} = 3 V		-58		
			V_{CC} = 4.5 V		-58		
		C_L = 5 pF, R_L = 50 Ω, f_{IN} = 1 MHz (sine wave) (see Fig.6)	V_{CC} = 1.65 V		-42		
			V_{CC} = 2.3 V		-42		
			V_{CC} = 3 V		-42		
			V_{CC} = 4.5 V		-42		
Crosstalk (Control Input To Signal Output) From Input (C) to Output (B or A)		C_L = 50 pF, R_L = 600 Ω, f_{IN} =1MHz (sine wave) (see Fig.7)	V_{CC} = 1.65 V		35		mV
			V_{CC} = 2.3 V		50		
			V_{CC} = 3 V		70		
			V_{CC} = 4.5 V		100		
Feedthrough Attenuation (Switch Off) From Input (A or B) to Output (B or A)		C_L = 50 pF, R_L = 600 Ω, f_{IN} =1MHz (sine wave) (see Fig.8)	V_{CC} = 1.65 V		-58		dB
			V_{CC} = 2.3 V		-58		
			V_{CC} = 3 V		-58		
			V_{CC} = 4.5 V		-58		
		C_L = 5 pF, R_L = 50 Ω, f_{IN} = 1MHz (sine wave) (see Fig.8)	V_{CC} = 1.65 V		-42		
			V_{CC} = 2.3 V		-42		
			V_{CC} = 3 V		-42		
			V_{CC} = 4.5 V		-42		
Sine-Wave Distortion From Input (A or B) to Output (B or A)		C_L = 50 pF, R_L = 10 kΩ, f_{IN} = 1kHz (sine wave) (see Fig.9)	V_{CC} = 1.65 V		0.1		%
			V_{CC} = 2.3 V		0.025		
			V_{CC} = 3 V		0.015		
			V_{CC} = 4.5 V		0.01		
		C_L = 50 pF, R_L = 10 kΩ, f_{IN} = 10kHz (sine wave) (see Fig.9)	V_{CC} = 1.65 V		0.15		
			V_{CC} = 2.3 V		0.025		
			V_{CC} = 3 V		0.015		
			V_{CC} = 4.5 V		0.01		

Note: Adjust f_{IN} voltage to obtain 0dBm at input.

■ OPERATING CHARACTERISTICS (T_A =25°C)

PARAMETER	SYMBOL	TEST CONDITIONS		MIN	TYP	MAX	UNIT
Power Dissipation Capacitance	C_{PD}	V_{CC} = 1.8V	f=10MHz		8		pF
		V_{CC} = 2.5V			9		
		V_{CC} = 3.3V			9.5		
		V_{CC} = 5V			11		

■ PARAMETER MEASUREMENT

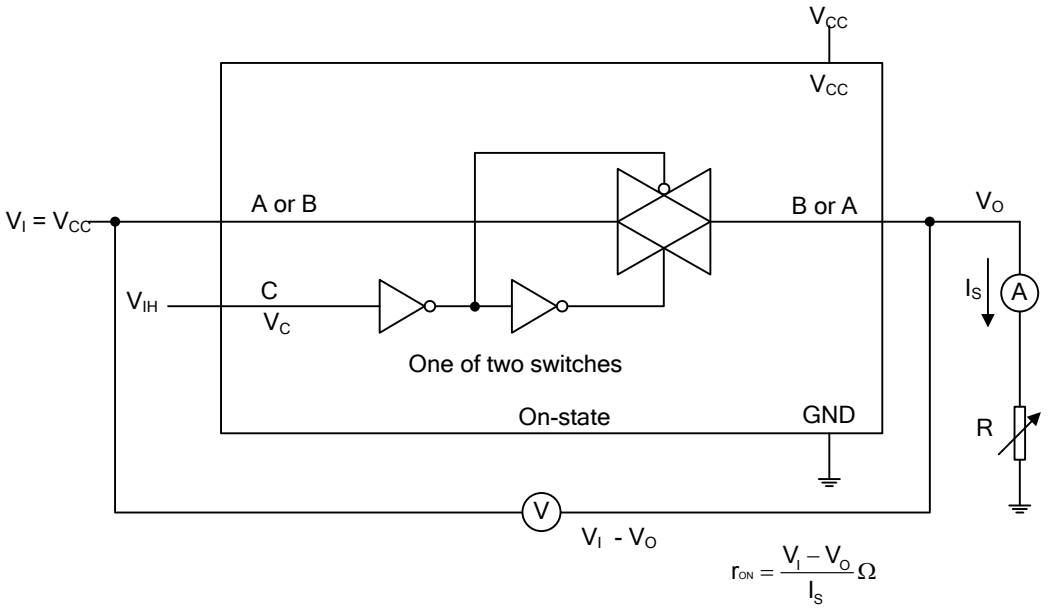

Fig.1 On-state resistance test circuit

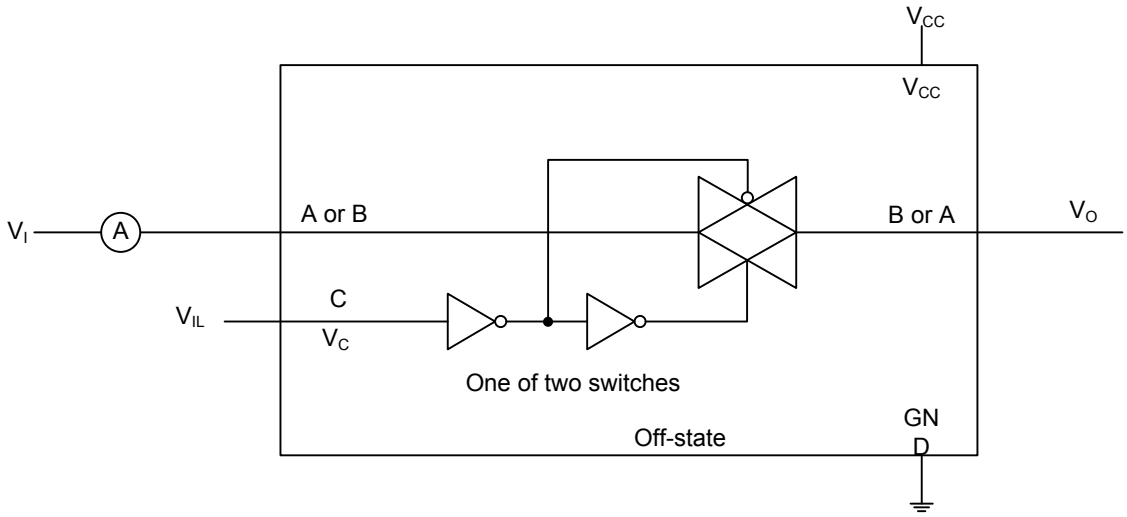

Condition 1: V_I = GND, V_O = V_{CC}
Condition 2: V_I = V_{CC}, V_O = GND

Fig.2 Off-state switch leakage-current test circuit

■ PARAMETER MEASUREMENT (Cont.)

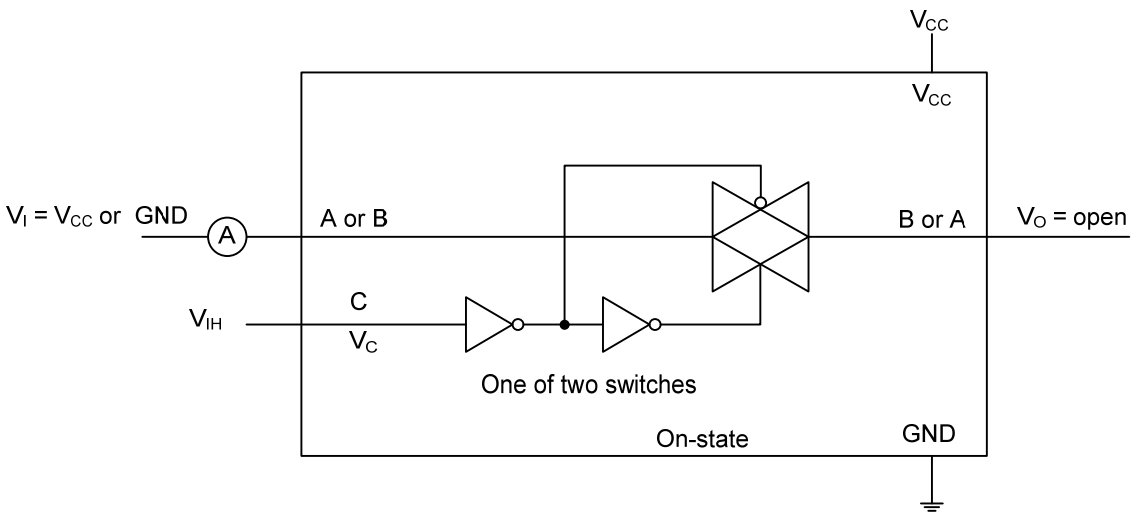

Fig.3 On-state leakage-current test circuit

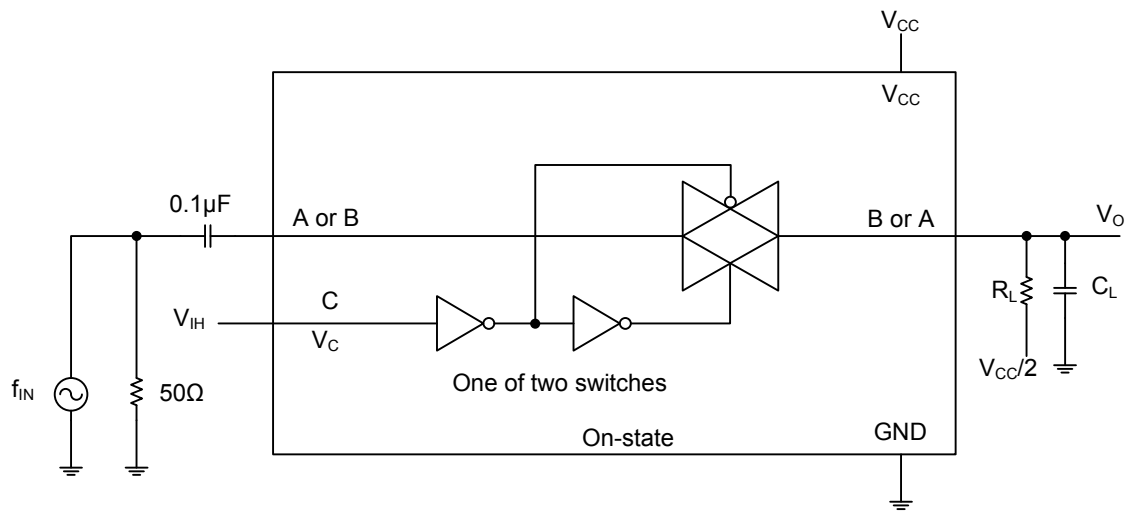

R_L/C_L : 600Ω / 50 pF
R_L/C_L : 50Ω / 5 pF

Fig.4 Frequency response (switch on)

■ PARAMETER MEASUREMENT (Cont.)

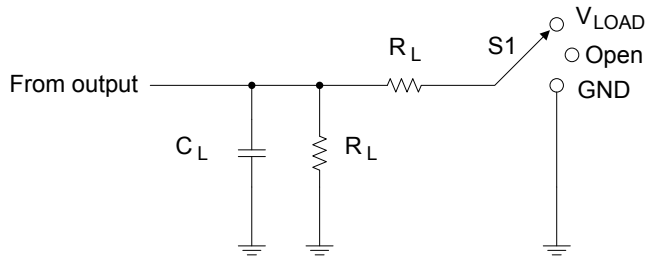

TEST CIRCUIT

TEST	S1
t_{PLH} / t_{PHL}	Open
t_{PLZ} / t_{PZL}	V_{LOAD}
t_{PHZ} / t_{PZH}	GND

V_{CC}	Inputs		V_M	V_{LOAD}	C_L	R_L	V_Δ
	V_{IN}	t_R, t_F					
1.8V±0.15V	V_{CC}	≤2ns	$V_{CC}/2$	$2*V_{CC}$	30pF	1KΩ	0.15V
2.5V±0.2V	V_{CC}	≤2ns	$V_{CC}/2$	$2*V_{CC}$	30pF	500Ω	0.15V
3.3V±0.3V	V_{CC}	≤2.5ns	$V_{CC}/2$	$2*V_{CC}$	50pF	500Ω	0.3V
5V±0.5V	V_{CC}	≤2.5ns	$V_{CC}/2$	$2*V_{CC}$	50pF	500Ω	0.3V

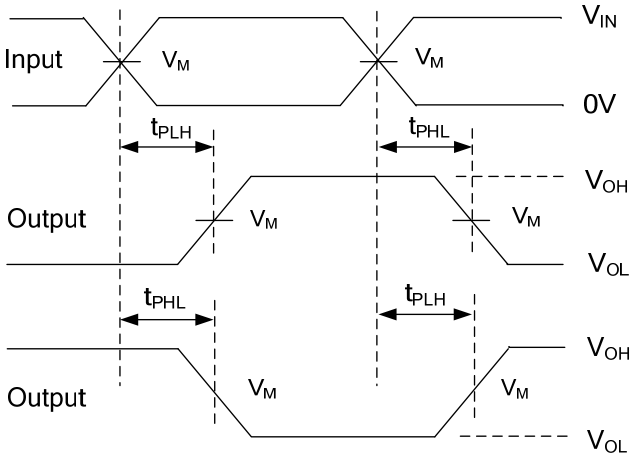

PROPAGATION DELAY TIMES

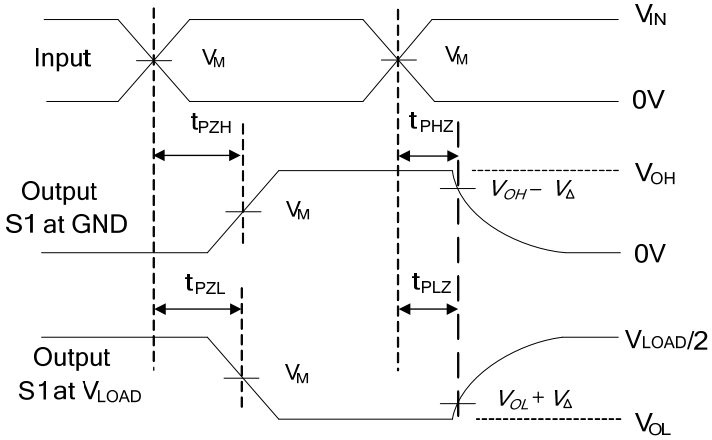

Enable and disable times
Low and high level enabling

Notes: 1. C_L includes probe and jig capacitance.
2. All input pulses are supplied by generators having the following characteristics: P_{RR} ≤10MHz, Z_O = 50Ω.

Fig.5 Load circuit and voltage waveforms

■ PARAMETER MEASUREMENT (Cont.)

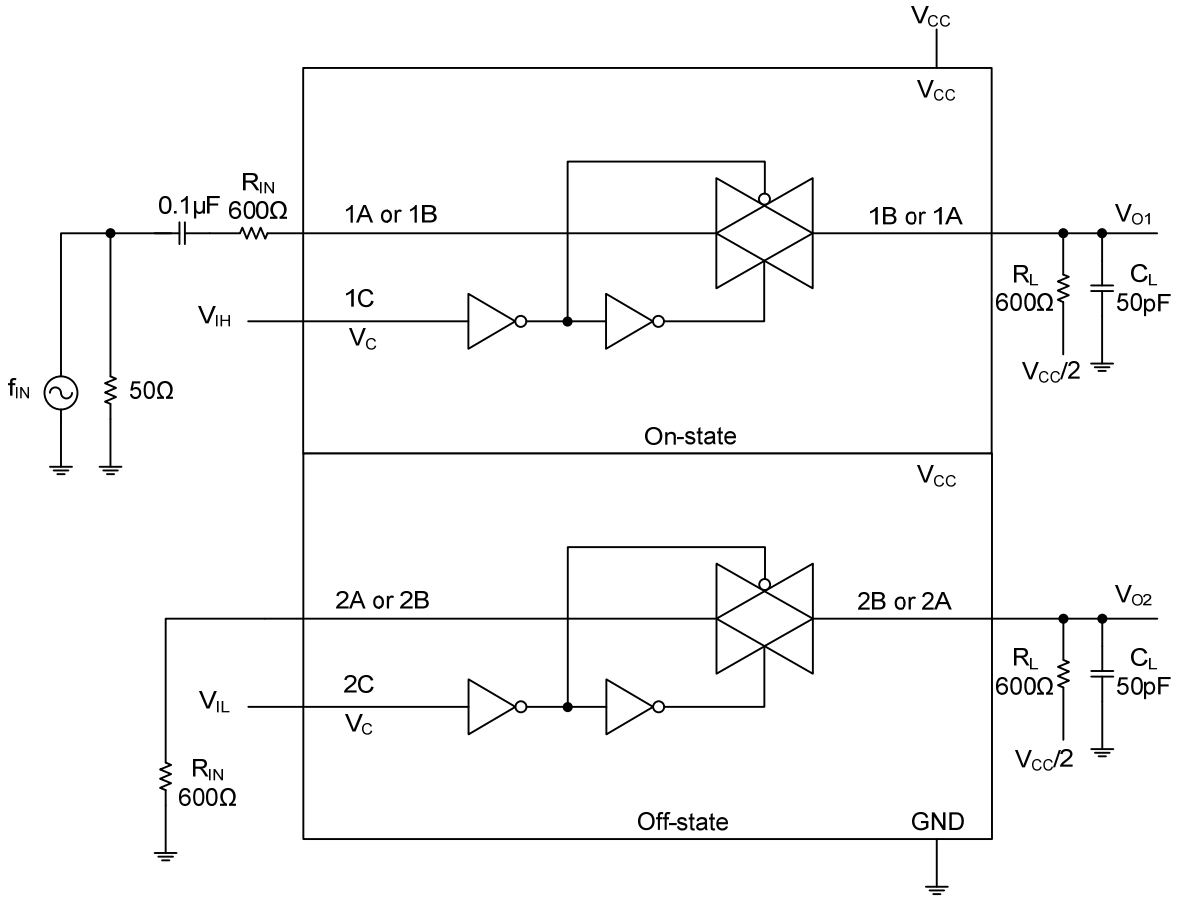

$20 \log_{10}(V_{O2}/V_{I1})$ or $20 \log_{10}(V_{O1}/V_{I2})$

Fig.6 Crosstalk (between switches)

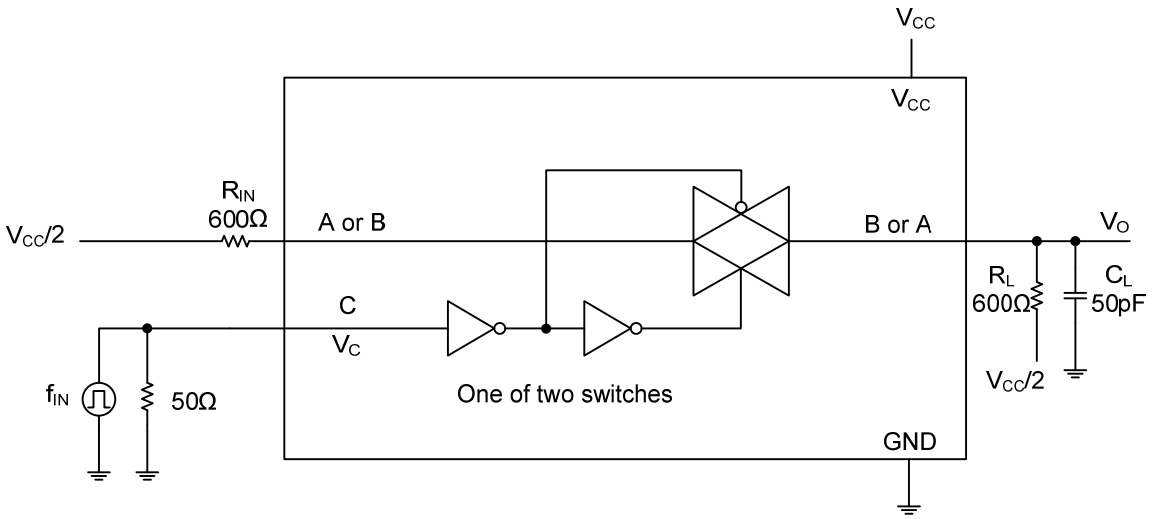

Fig.7 Crosstalk (control input, switch output)

■ PARAMETER MEASUREMENT (Cont.)

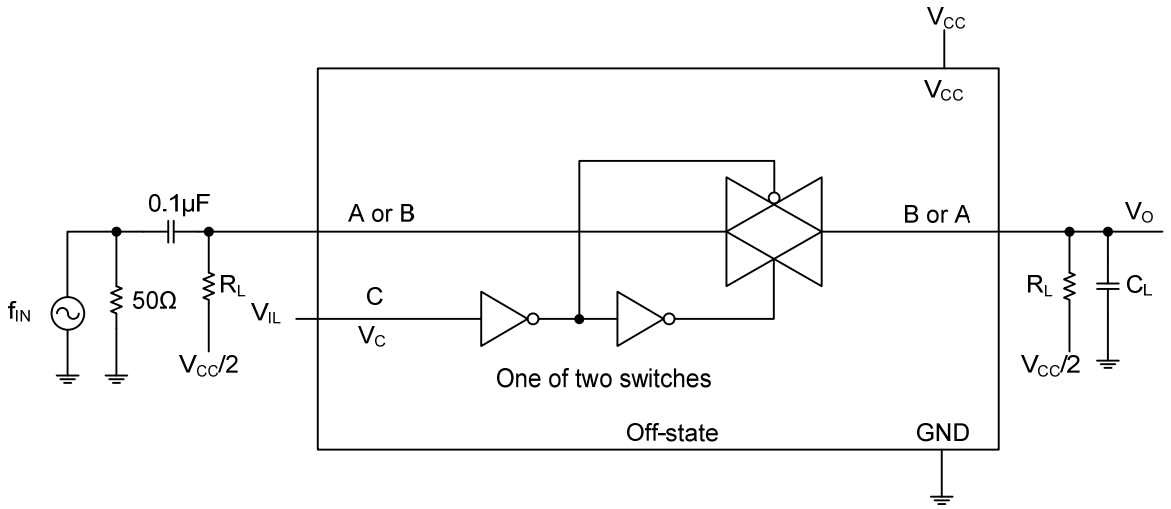

R_L/C_L : 600Ω / 50 pF
R_L/C_L : 50Ω / 5 pF

Fig.8 Feedthrough (switch off)

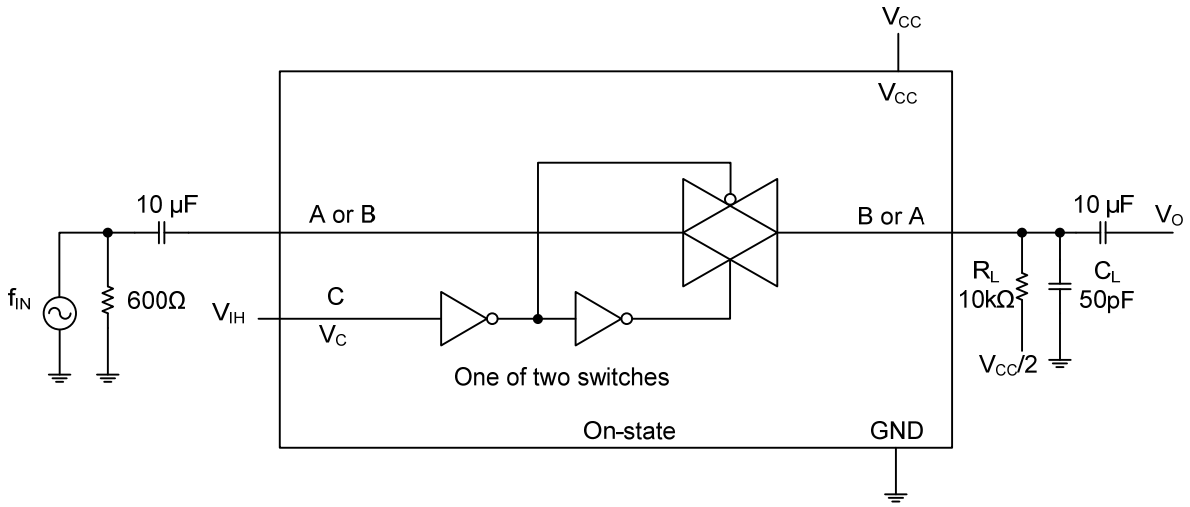

V_{CC}=1.65V, V_I = 1.4 V_{P-P}
V_{CC}=2.3V, V_I = 2 V_{P-P}
V_{CC}=3V, V_I = 2.5 V_{P-P}
V_{CC}=4.5V, V_I = 4 V_{P-P}

Fig.9 Sine-wave distortion

UTC assumes no responsibility for equipment failures that result from using products at values that exceed, even momentarily, rated values (such as maximum ratings, operating condition ranges, or other parameters) listed in products specifications of any and all UTC products described or contained herein. UTC products are not designed for use in life support appliances, devices or systems where malfunction of these products can be reasonably expected to result in personal injury. Reproduction in whole or in part is prohibited without the prior written consent of the copyright owner. The information presented in this document does not form part of any quotation or contract, is believed to be accurate and reliable and may be changed without notice.