THIS DRAWING IS UNPUBLISHED. RELEASED FOR PUBLICATION 2004
© COPYRIGHT 2004 BY - ALL RIGHTS RESERVED.

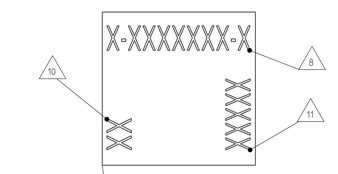

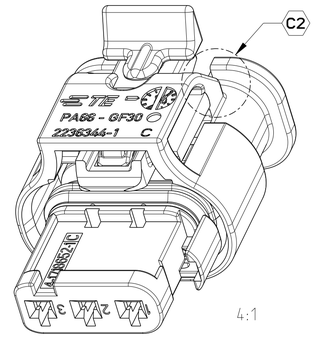

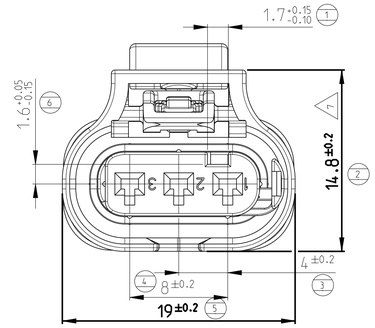

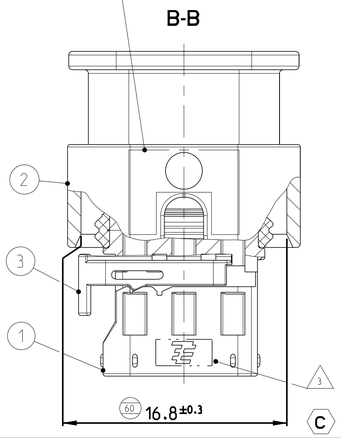

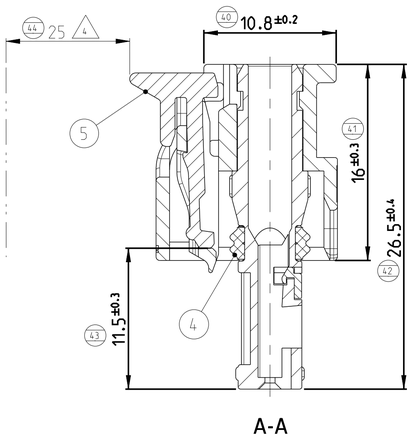

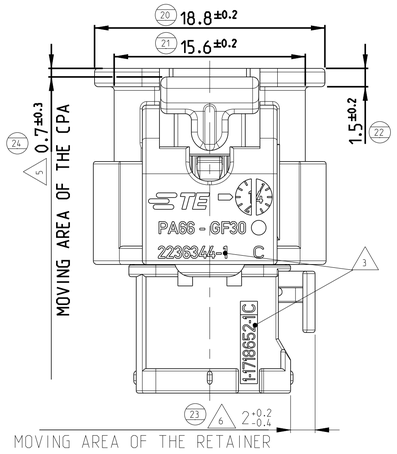

CODING

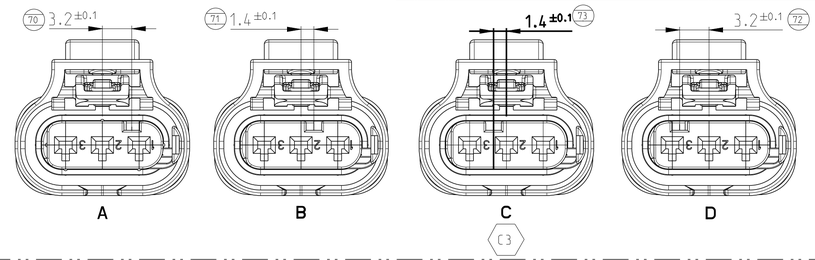

REVISIONS

P	LTR	DESCRIPTION	DATE	DWN	APVD
	C2	OUT HSG DESIGN UPDATED WITH CUTOUT	18JUL2016	SzN	LSz
	C3	CODING C ADDED	09JAN2017	LSz	SzN
	C4	CODING C WITH CPA VERSION ADDED	07JUN2017	SzN	LSz
	C5	ADDITIONAL INFO ON WIRE CROSSECTION	29AUG2019	SZN	LSZ

NOTES:

1 USABLE CONTACTS MCON 1.2
SEE TE Connectivity -NO. 1452674, VERSION SINGLE WIRE SEAL

C5 2 MAX. WIRE SIZE RANGE 1.5 mm² FLR PERMITTED
FOR CAVITY-Ø 3.55MM
QUANTITY SEE WIRE HARNESS DRAWING
FOR PERMISSIBLE CURRENT CARRYING CAPACITY OF THE SINGLE CONTACT
SEE PRODUCT SPECIFICATION NO.108-18782

3 SUPPLIER-MARK

4 SPACE OF ACTIVITY

5 SUPPLY CONDITION: CPA IN PRELOCKED POSITION

6 SUPPLY CONDITION: RETAINER IN PRELOCKED POSITION

7 WARPAGE PERMITTED TO MAX. -0.5mm

8 TE Connectivity ORDER-NO.

9 ACCORDING TO INTERFACE DRAWING
SEE TE-NO. 114-18679-3

10 ASSEMBLY LINE SEGMENT IDENTIFICATION

11 DATE CODE (DDDYY)

CODING A AS SHOWN

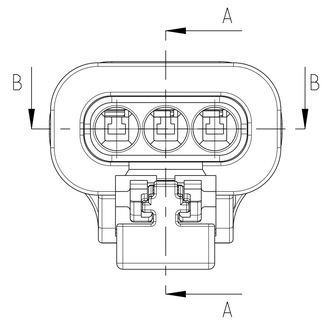

TE-ORDER-NO. 10	COD	DESCRIPTION	REV	QTY	DESCRIPTION	MATERIAL	SURFACE/COLOR	ITEM
4-2236343-5	D	CONNECTOR 3POS.	C	1	CPA	PBT GF33	RED	5
				1	3pos SEAL	SILICONE RUBBER	GREEN	4
				1	3pos RETAINER	PA66-GF15	VIOLETT - SIMILAR TO RAL 4006	3
				1	3pos OUTER HOUSING	PA66-GF30	BLACK - SIMILAR TO RAL 9011	2
				1	3pos INNER HOUSING	PA66-GF30	VIOLETT - SIMILAR TO RAL 4006	1
3-2236343-5	C	CONNECTOR 3POS C4	C	1	CPA	PBT - GF33	RED	5
				1	3pos SEAL	SILICONE RUBBER	GREEN	4
				1	3pos RETAINER	PA66 - GF15	VIOLETT - SIMILAR TO RAL 4006	3
				1	3pos OUTER HOUSING	PA66 - GF30	BLACK - SIMILAR TO RAL 9011	2
				1	3pos INNER HOUSING	PA66 - GF30	BLUE - SIMILAR TO RAL 5012	1
2-2236343-5	B	CONNECTOR 3POS.	C	1	CPA	PBT GF33	RED	5
				1	3pos SEAL	SILICONE RUBBER	GREEN	4
				1	3pos RETAINER	PA66-GF15	VIOLETT - SIMILAR TO RAL 4006	3
				1	3pos OUTER HOUSING	PA66-GF30	BLACK - SIMILAR TO RAL 9011	2
				1	3pos INNER HOUSING	PA66-GF30	NATURE -	1
1-2236343-5	A	CONNECTOR 3POS.	C	1	CPA	PBT GF33	RED	5
				1	3pos SEAL	SILICONE RUBBER	GREEN	4
				1	3pos RETAINER	PA66-GF15	VIOLETT - SIMILAR TO RAL 4006	3
				1	3pos OUTER HOUSING	PA66-GF30	BLACK - SIMILAR TO RAL 9011	2
				1	3pos INNER HOUSING	PA66-GF30	BLACK - SIMILAR TO RAL 9011	1
4-2236343-1	D	CONNECTOR 3POS.	C	1	3pos SEAL	SILICONE RUBBER	GREEN	4
				1	3pos RETAINER	PA66-GF15	VIOLETT - SIMILAR TO RAL 4006	3
				1	3pos OUTER HOUSING	PA66-GF30	BLACK - SIMILAR TO RAL 9011	2
				1	3pos INNER HOUSING	PA66-GF30	VIOLETT - SIMILAR TO RAL 4006	1
3-2236343-1 C3	C	CONNECTOR 3POS.	C	1	3pos SEAL	SILICONE RUBBER	GREEN	4
				1	3pos RETAINER	PA66-GF15	VIOLETT - SIMILAR TO RAL 4006	3
				1	3pos OUTER HOUSING	PA66-GF30	BLACK - SIMILAR TO RAL 9011	2
				1	3pos INNER HOUSING	PA66-GF30	BLUE - SIMILAR TO RAL 5012	1
2-2236343-1	B	CONNECTOR 3POS.	C	1	3pos SEAL	SILICONE RUBBER	GREEN	4
				1	3pos RETAINER	PA66-GF15	VIOLETT - SIMILAR TO RAL 4006	3
				1	3pos OUTER HOUSING	PA66-GF30	BLACK - SIMILAR TO RAL 9011	2
				1	3pos INNER HOUSING	PA66-GF30	NATURE -	1
1-2236343-1	A	CONNECTOR 3POS.	C	1	3pos SEAL	SILICONE RUBBER	GREEN	4
				1	3pos RETAINER	PA66-GF15	VIOLETT - SIMILAR TO RAL 4006	3
				1	3pos OUTER HOUSING	PA66-GF30	BLACK - SIMILAR TO RAL 9011	2
				1	3pos INNER HOUSING	PA66-GF30	BLACK - SIMILAR TO RAL 9011	1

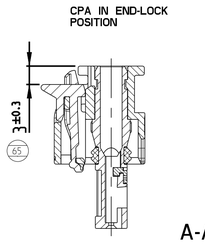

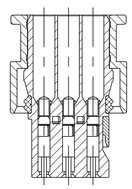

TOLERANCES UNLESS OTHERWISE SPECIFIED ACC. TO DIN 16901-140 CONCENTRIC TO NOMINAL DIMENSION. EDITION 1982-11 SHALL APPLY.
Freimasstoleranzen nach DIN 16901-140 . Es gilt die Ausgabe 1982-11.

PRODUCT CHARACTERISTICS ACC. QMP EMEA_12
BESONDERE MERKMALE NACH QMP EMEA_12

THIS DRAWING IS A CONTROLLED DOCUMENT.

DIMENSIONS: mm

TOLERANCES UNLESS OTHERWISE SPECIFIED: 0 PLC ±; 1 PLC ±; 2 PLC ±; 3 PLC ±; 4 PLC ±; ANGLES ±2°

MATERIAL - -

FINISH - -

DWN	Sz.Nemes	30JAN2014
CHK	G.Bencur	30JAN2014
APVD	G.Bencur	30JAN2014
PRODUCT SPEC	108-18969-3	
APPLICATION SPEC	114-18861	
WEIGHT	-	

TE Connectivity

NAME: 3pos. MCON 1.2 - LL Connector Sealed (High temp.)

SIZE	CAGE CODE	DRAWING NO	RESTRICTED TO
A1	00779	C-2236343	-

CUSTOMER DRAWING | SCALE 4:1 | SHEET 1 OF 1 | REV C5

4805 (3/13)

Mouser Electronics

Authorized Distributor

Click to View Pricing, Inventory, Delivery & Lifecycle Information:

TE Connectivity:

1-2236343-1