WESTCODE

Date:- 2 Mar, 2001

Data Sheet Issue:- 1

Provisional Data

Distributed Gate Thyristor

Types R2136TC48 to R2136TC52

Absolute Maximum Ratings

	VOLTAGE RATINGS	MAXIMUM LIMITS	UNITS
V_{DRM}	Repetitive peak off-state voltage, (note 1)	4800-5200	V
V_{DSM}	Non-repetitive peak off-state voltage, (note 1)	4800-5200	V
V_{RRM}	Repetitive peak reverse voltage, (note 1)	4800-5200	V
V_{RSM}	Non-repetitive peak reverse voltage, (note 1)	4900-5300	V

	OTHER RATINGS	MAXIMUM LIMITS	UNITS
$I_{T(AV)}$	Mean on-state current, T_{sink}=55°C, (note 2)	2136	A
$I_{T(AV)}$	Mean on-state current. T_{sink}=85°C, (note 2)	1461	A
$I_{T(AV)}$	Mean on-state current. T_{sink}=85°C, (note 3)	880	A
$I_{T(RMS)}$	Nominal RMS on-state current, T_{sink}=25°C, (note 2)	4222	A
$I_{T(d.c.)}$	D.C. on-state current, T_{sink}=25°C, (note 4)	3643	A
I_{TSM}	Peak non-repetitive surge t_p=10ms, V_{RM}=0.6V_{RRM}, (note 5)	27	kA
I_{TSM2}	Peak non-repetitive surge t_p=10ms, V_{RM}≤10V, (note 5)	30	kA
I^2t	I^2t capacity for fusing t_p=10ms, V_{RM}=0.6V_{RRM}, (note 5)	3.65×10^6	A^2s
I^2t	I^2t capacity for fusing t_p=10ms, V_{RM}≤10V, (note 5)	4.5×10^6	A^2s
di_T/dt	Maximum rate of rise of on-state current (repetitive), (Note 6)	1000	A/µs
	Maximum rate of rise of on-state current (non-repetitive), (Note 6)	1500	A/µs
V_{RGM}	Peak reverse gate voltage	5	V
$P_{G(AV)}$	Mean forward gate power	4	W
P_{GM}	Peak forward gate power	30	W
V_{GD}	Non-trigger gate voltage, (Note 7)	0.25	V
T_{HS}	Operating temperature range	-40 to +125	°C
T_{stg}	Storage temperature range	-40 to +150	°C

Notes:-
1) De-rating factor of 0.13% per °C is applicable for T_j below 25°C.
2) Double side cooled, single phase; 50Hz, 180° half-sinewave.
3) Single side cooled, single phase; 50Hz, 180° half-sinewave.
4) Double side cooled.
5) Half-sinewave, 125°C T_j initial.
6) V_D=67% V_{DRM}, Gate Source=30V, 15Ω, t_r≤0.5µs, T_{case}=125°C.
7) Rated V_{DRM}.

Provisional Data

Characteristics

	PARAMETER	MIN.	TYP.	MAX.	TEST CONDITIONS (Note 1)	UNITS
V_{TM}	Maximum peak on-state voltage	-	-	2.6	I_{TM}=4000A	V
V_0	Threshold voltage	-	-	1.421		V
r_s	Slope resistance	-	-	0.295		mΩ
dv/dt	Critical rate of rise of off-state voltage	200	-	-	V_D=80% V_{DRM}	V/µs
I_{DRM}	Peak off-state current	-	-	200	Rated V_{DRM}	mA
I_{RRM}	Peak reverse current	-	-	200	Rated V_{RRM}	mA
V_{GT}	Gate trigger voltage	-	-	3.0	T_j=25°C	V
I_{GT}	Gate trigger current	-	-	600	T_j=25°C V_D=10V, I_T=3A	mA
I_H	Holding current	-	-	1000	T_j=25°C	mA
t_{gd}	Gate controlled turn-on delay time	-	1.3	2.0	I_{FG}=2A, t_r=0.5µs, V_D=67%V_{DRM}, I_{TM}=2000A, di/dt=60A/µs, T_j=25°C	µs
t_{gt}	Turn-on time	-	3.0	4.0		
Q_{rr}	Recovered charge	-	-	13250	I_{TM}=2000A, t_p=2000µs, di/dt=60A/µs, V_r=50V	µC
Q_{ra}	Recovered charge, 50% Chord	-	-	4750		µC
I_{rm}	Reverse recovery current	-	-	595		A
t_{rr}	Reverse recovery time, 50% chord	-	-	20		µs
t_q	Turn-off time	Note 2	500	Note 2	I_{TM}=2000A, t_p=2000µs, di/dt=60A/µs, V_r=50V, V_{dr}=67%V_{DRM}, dV_{dr}/dt=20V/µs	µs
			750		I_{TM}=2000A, t_p=2000µs, di/dt=60A/µs, V_r=50V, V_{dr}=67%V_{DRM}, dV_{dr}/dt=200V/µs	
$R_{th(j-hs)}$	Thermal resistance, junction to heatsink	-	-	0.011	Double side cooled	K/W
		-	-	0.022	Single side cooled	K/W
F	Mounting force	63	-	77		kN
W_t	Weight	-	1.23	-		kg

Notes:-
1) Unless otherwise indicated T_j=125°C
2) Selections of t_q above and below typical values are available upon request

Advance Data

Notes on Ratings and Characteristics

1.0 Voltage Grade Table

Voltage Grade	V_{DRM} V_{DSM} V_{RRM} V	V_{RSM} V	V_D V_R DC V
48	4800	4900	2160
50	5000	5100	2200
52	5200	5300	2240

2.0 Extension of Voltage Grades

This report is applicable to other and higher voltage grades when supply has been agreed by Sales/Production.

3.0 Extension of Turn-off Time

This Report is applicable to other t_q/re-applied dv/dt combinations when supply has been agreed by Sales/Production.

4.0 Repetitive dv/dt

Higher dv/dt selections are available up to 1000V/µs on request.

5.0 De-rating Factor

A blocking voltage de-rating factor of 0.13%/°C is applicable to this device for T_j below 25°C.

6.0 Rate of rise of on-state current

The maximum un-primed rate of rise of on-state current must not exceed 1500A/µs at any time during turn-on on a non-repetitive basis. For repetitive performance, the on-state rate of rise of current must not exceed 1000A/µs at any time during turn-on. Note that these values of rate of rise of current apply to the total device current including that from any local snubber network.

7.0 Square wave ratings

These ratings are given for load component rate of rise of forward current of 100 and 500 A/µs.

8.0 Duty cycle lines

The 100% duty cycle is represented on all the ratings by a straight line. Other duties can be included as parallel to the first.

9.0 Maximum Operating Frequency

The maximum operating frequency is set by the on-state duty, the time required for the thyristor to turn off (t_q) and for the off-state voltage to reach full value (t_v), i.e.

$$f_{\max} = \frac{1}{t_{pulse} + t_q + t_v}$$

Advance Data

10.0 On-State Energy per Pulse Characteristics

These curves enable rapid estimation of device dissipation to be obtained for conditions not covered by the frequency ratings.

Let E_p be the Energy per pulse for a given current and pulse width, in joules
Let $R_{th(J-Hs)}$ be the steady-state d.c. thermal resistance (junction to sink)
and T_{SINK} be the heat sink temperature.

Then the average dissipation will be:

$$W_{AV} = E_P \cdot f \text{ and } T_{SINK(\max.)} = 125 - \left(W_{AV} \cdot R_{th(J-Hs)}\right)$$

11.0 Reverse recovery ratings

(i) Q_{ra} is based on 50% I_{rm} chord as shown in Fig. 1 below.

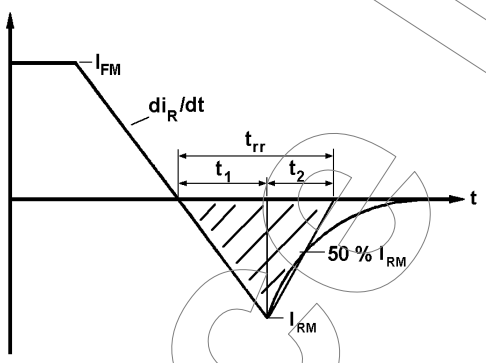

Fig. 1

(ii) Q_{rr} is based on a 150µs integration time.

i.e.
$$Q_{rr} = \int_0^{150\mu s} i_{rr}.dt$$

(iii)
$$K\ Factor = \frac{t1}{t2}$$

12.0 Reverse Recovery Loss

12.1 Determination by Measurement

From waveforms of recovery current obtained from a high frequency shunt (see Note 1, Page 5) and reverse voltage present during recovery, an instantaneous reverse recovery loss waveform must be constructed. Let the area under this waveform be E joules per pulse. A new heat sink temperature can then be evaluated from:

$$T_{SINK(new)} = T_{SINK(original)} - E \cdot \left(k + f \cdot R_{th(J-Hs)}\right)$$

where k = 0.227 (°C/W)/s

E = Area under reverse loss waveform per pulse in joules (W.s.)
f = rated frequency Hz at the original heat sink temperature.
$R_{th(J-Hs)}$ = d.c. thermal resistance (°C/W).

Advance Data

The total dissipation is now given by:

$$W_{(TOT)} = W_{(original)} + E \cdot f$$

12.2 Determination without Measurement

In circumstances where it is not possible to measure voltage and current conditions, or for design purposes, the additional losses E in joules may be estimated as follows.

Let E be the value of energy per reverse cycle in joules (curves in Figure 9).
Let f be the operating frequency in Hz

$$T_{SINK(new)} = T_{SINK(original)} - (E \cdot R_{th} \cdot f)$$

Where $T_{SINK\ (new)}$ is the required maximum heat sink temperature and
$T_{SINK\ (original)}$ is the heat sink temperature given with the frequency ratings.

A suitable R-C snubber network is connected across the thyristor to restrict the transient reverse voltage to a peak value (V_{rm}) of 67% of the maximum grade. If a different grade is being used or V_{rm} is other than 67% of Grade, the reverse loss may be approximated by a pro rata adjustment of the maximum value obtained from the curves.

NOTE 1- Reverse Recovery Loss by Measurement

This thyristor has a low reverse recovered charge and peak reverse recovery current. When measuring the charge care must be taken to ensure that:

(a) a.c. coupled devices such as current transformers are not affected by prior passage of high amplitude forward current.
(b) A suitable, polarised, clipping circuit must be connected to the input of the measuring oscilloscope to avoid overloading the internal amplifiers by the relatively high amplitude forward current signal
(c) Measurement of reverse recovery waveform should be carried out with an appropriate critically damped snubber, connected across diode anode to cathode. The formula used for the calculation of this snubber is shown below:

$$R^2 = 4 \cdot \frac{V_r}{C_S \cdot {}^{di}\!/_{dt}}$$

Where: V_r = Commutating source voltage
C_S = Snubber capacitance
R = Snubber resistance

13.0 Gate Drive

The recommended pulse gate drive is 30V, 15Ω with a short-circuit current rise time of not more than 0.5µs. This gate drive must be applied when using the full di/dt capability of the device.

The duration of pulse may need to be configured with respect to the application but should be no shorter than 20µs, otherwise an increase in pulse current could be needed to supply the resulting increase in charge to trigger.

Advance Data

14.0 Computer Modelling Parameters

14.1 Calculating V_T using ABCD Coefficients

The on-state characteristic I_T vs V_T, on page 8 is represented in two ways;
(i) the well established V_o and r_s tangent used for rating purposes and
(ii) a set of constants A, B, C, D, forming the coefficients of the representative equation for V_T in terms of I_T given below:

$$V_T = A + B \cdot \ln(I_T) + C \cdot I_T + D \cdot \sqrt{I_T}$$

The constants, derived by curve fitting software, are given in this report for hot and cold characteristics where possible. The resulting values for V_T agree with the true device characteristic over a current range, which is limited to that plotted.

25°C Coefficients		125°C Coefficients	
A	6.878409	A	2.31712993
B	-1.107307	B	-0.1605662
C	-3.2302431×10^{-4}	C	2.676208×10^{-4}
D	0.09985874	D	8.603465×10^{-3}

14.2 D.C. Thermal Impedance Calculation

$$r_t = \sum_{p=1}^{p=n} r_p \cdot \left(1 - e^{\frac{-t}{\tau_p}}\right)$$

Where *p = 1* to *n, n* is the number of terms in the series.

t = Duration of heating pulse in seconds.
r_t = Thermal resistance at time t.
r_p = Amplitude of p_{th} term.
τ_p = Time Constant of r_{th} term.

D.C. Double Side Cooled			
Term	1	2	3
r_p	5.228149×10^{-3}	3.076205×10^{-3}	1.977511×10^{-3}
τ_p	0.9862513	0.2593041	0.03447094

D.C. Single Side Cooled				
Term	1	2	3	4
r_p	0.01186497	3.872272×10^{-3}	3.457033×10^{-3}	1.694157×10^{-3}
τ_p	7.361938	1.651253	0.2019036	0.02934724

Advance Data

14.3 Recovery parameter estimation

Maximum recovery parameters may be calculated, using the polynomial expression:

$$y = \sum_{p=0}^{p=n-1} k_p \cdot \left({di_r}/{dt} \right)^p$$

Where: y = recovery parameter (Q_{rr}, Q_{ra}, I_{rm} or t_{rr})
k_p = coefficient found in the relevant table below,
n = number of terms in the series,
p = term number

Total Recovered Charge Q_{rr} (Valid di/dt range 20 to 300A/µs)				
Values of k_p for Q_{rr}				
p	500A	1000A	2000A	4000A
4	-5.15726029×10^{-6}	-8.09986657×10^{-6}	-1.00665951×10^{-5}	-1.15535303×10^{-5}
3	3.47869156×10^{-3}	5.48662428×10^{-3}	6.83801518×10^{-3}	7.86482530×10^{-3}
2	-0.82411031	-1.31351027	-1.64887826	-1.90670779
1	95.82213950	159.63629409	207.06194597	245.34495217
0	4385.06246082	5230.5462895	5543.79361533	5777.75960621

Recovered Charge Q_{ra}, 50% chord (Valid di/dt range 20 to 300A/µs)				
Values of k_p for Q_{ra}				
p	500A	1000A	2000A	4000A
4	-1.59083713×10^{-6}	-2.68719240×10^{-6}	-3.31646597×10^{-6}	-4.03536145×10^{-6}
3	1.06918164×10^{-3}	1.81137727×10^{-3}	2.24112934×10^{-3}	2.73327212×10^{-3}
2	-0.25092981	-0.42853858	-0.53327029	-0.65415524
1	28.05410123	49.61773653	63.13946885	79.35851252
0	1971.21443413	2344.03671107	2482.13881239	2633.22077357

Peak reverse recovery current I_{rm} (Valid di/dt range 20 to 300A/µs)				
Values of k_p for I_{rm}				
p	500A	1000A	2000A	4000A
4	-2.75174285×10^{-7}	-3.22702737×10^{-7}	-3.60393441×10^{-7}	-3.93889819×10^{-7}
3	1.91411248×10^{-4}	2.24564736×10^{-4}	2.50708899×10^{-4}	2.74201226×10^{-4}
2	-4.91791455×10^{-2}	-5.77426414×10^{-2}	-6.44222310×10^{-2}	-7.05967003×10^{-2}
1	8.80537356	10.37289122	11.54097328	12.83476545
0	69.32949062	81.19524465	90.83365114	97.32430798

Reverse recovery time t_{rr} (Valid di/dt range 20 to 300A/µs)				
Values of k_p for t_{rr}				
p	500A	1000A	2000A	4000A
4	5.97388887×10^{-8}	6.05379452×10^{-8}	6.14646494×10^{-8}	6.17754420×10^{-8}
3	-3.90765545×10^{-5}	-3.96552974×10^{-5}	-4.02988153×10^{-5}	-4.05440076×10^{-5}
2	8.61355983×10^{-3}	8.76870201×10^{-3}	8.92908457×10^{-3}	9.00484483×10^{-3}
1	-0.77866866	-0.80017605	-0.81981071	-0.83275198
0	37.37027346	41.13540798	44.21409705	47.68811238

Provisional Data

Curves

Figure 1 – On-state characteristics of Limit device

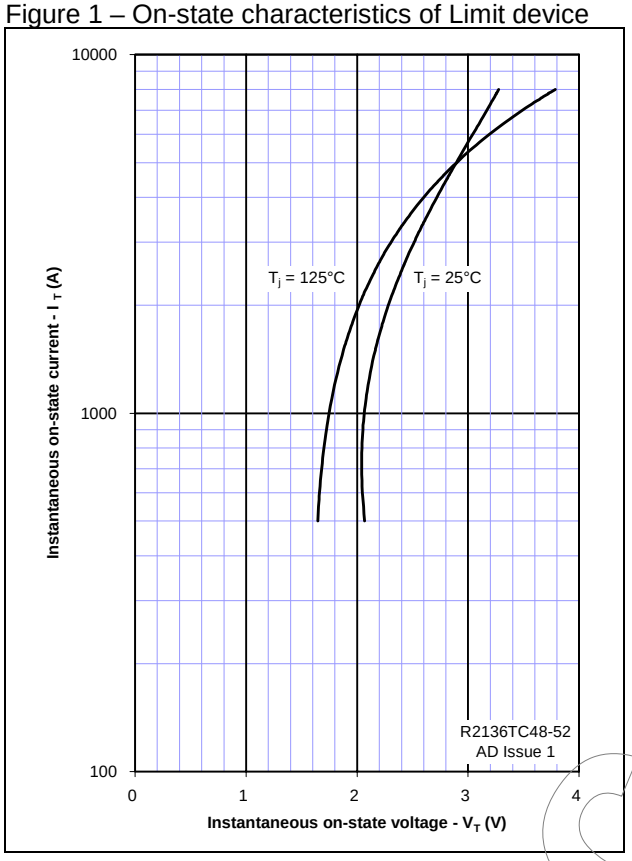

Figure 2 – Transient thermal impedance

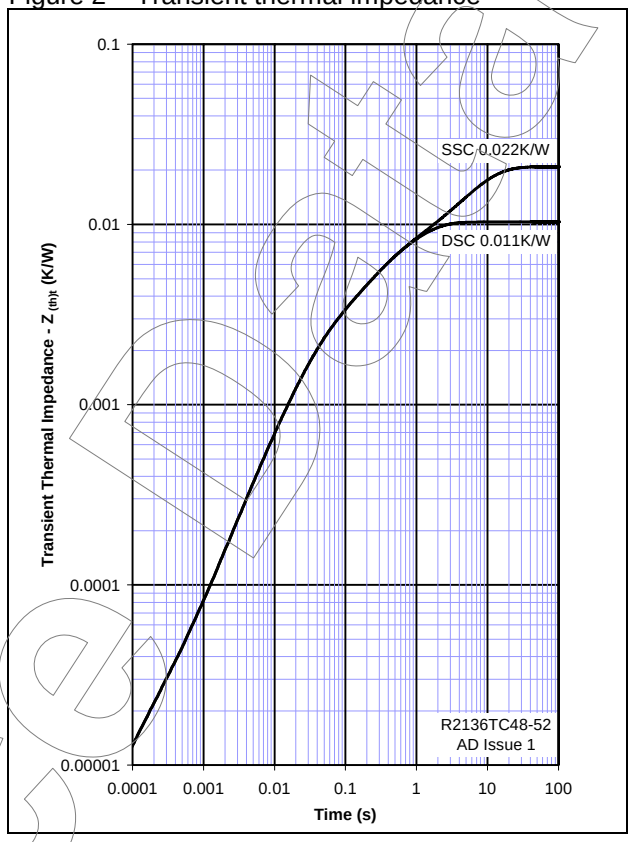

Figure 3 – Gate characteristics - Trigger limits

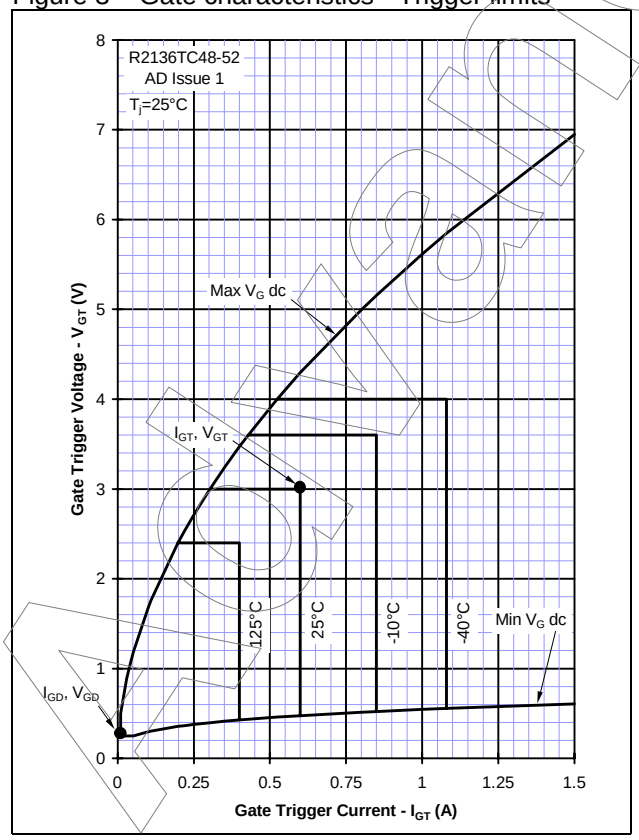

Figure 4 – Gate characteristics - Power curves

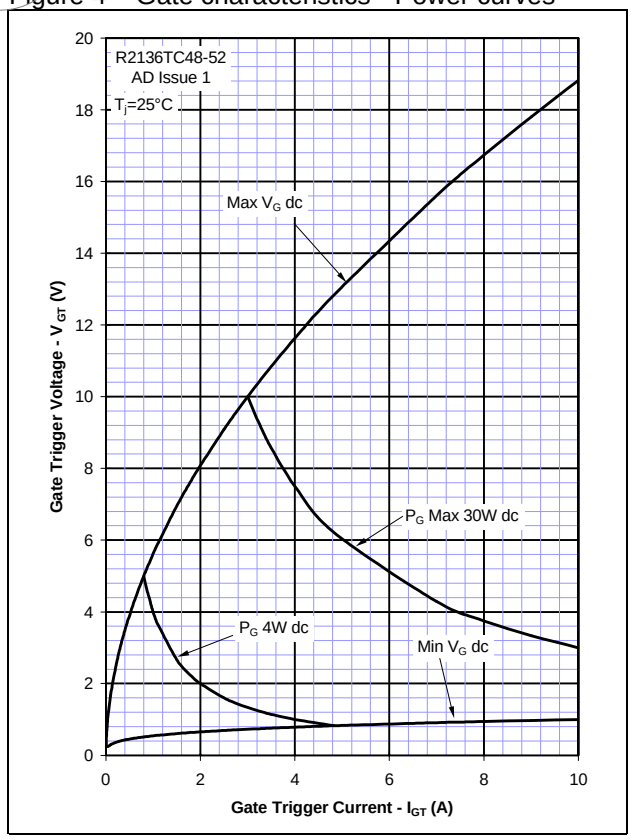

Figure 5 – Total recovered charge, Q_{rr}

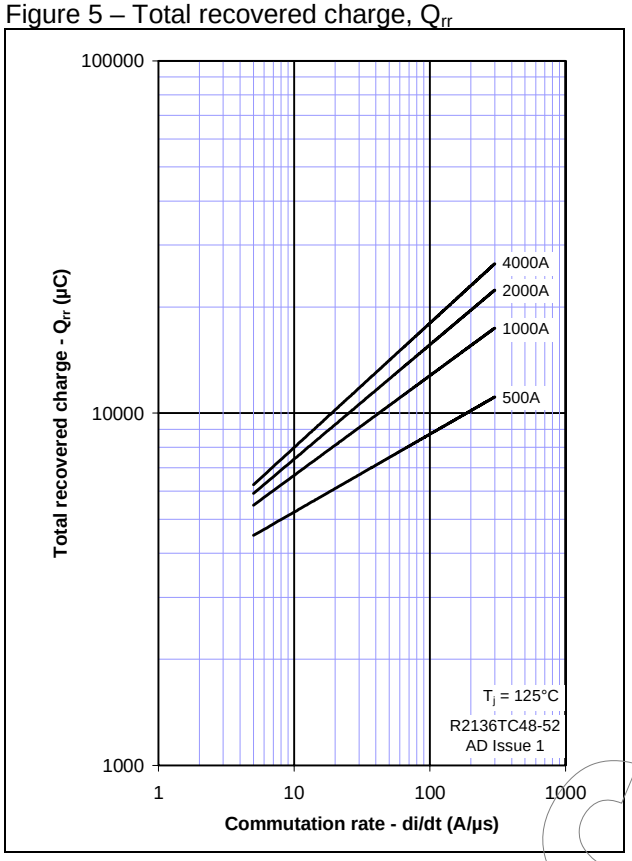

Figure 6 – Recovered charge, Q_{ra} (50% chord)

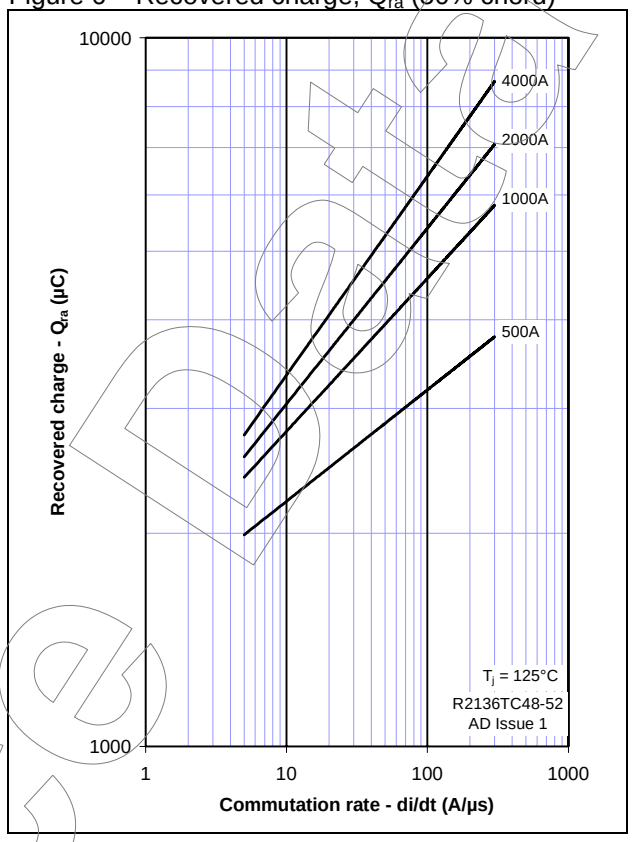

Figure 7 – Peak reverse recovery current, I_{rm}

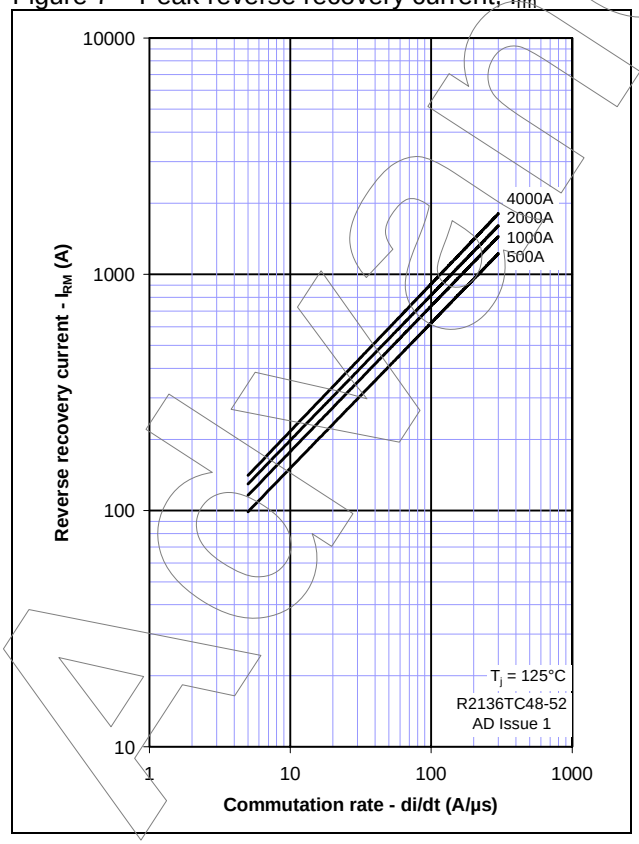

Figure 8 – Maximum recovery time, t_{rr} (50% chord)

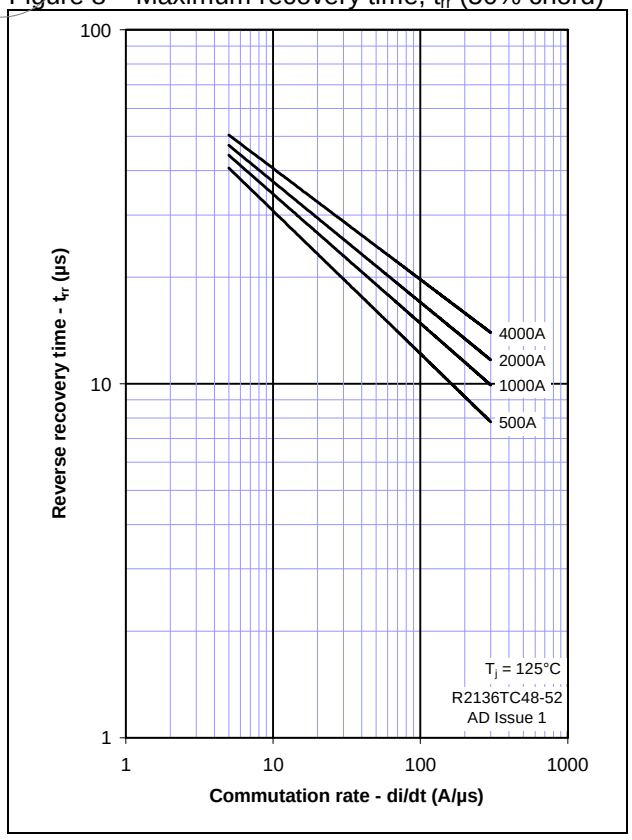

Advance Data

Figure 9 – Reverse recovery energy per pulse

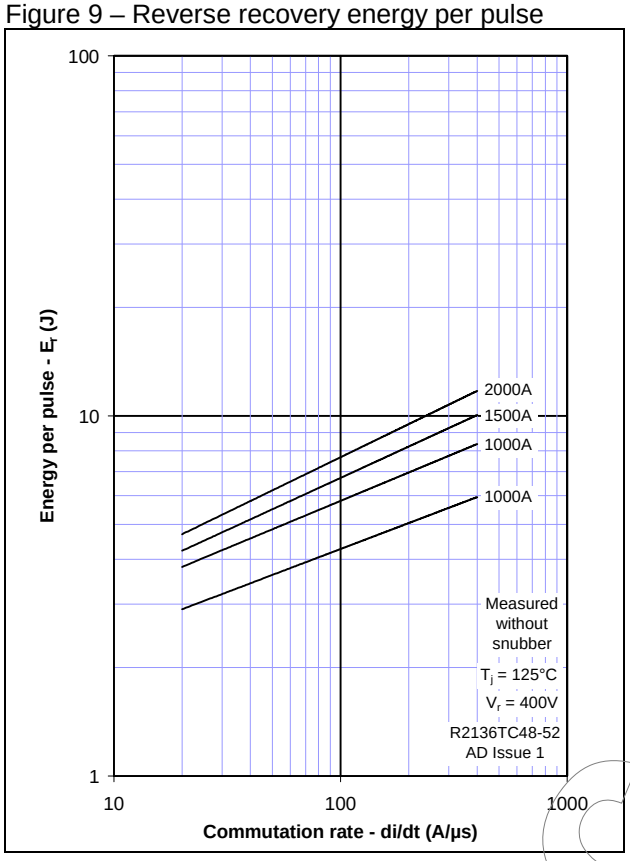

Figure 10 – Sine wave energy per pulse

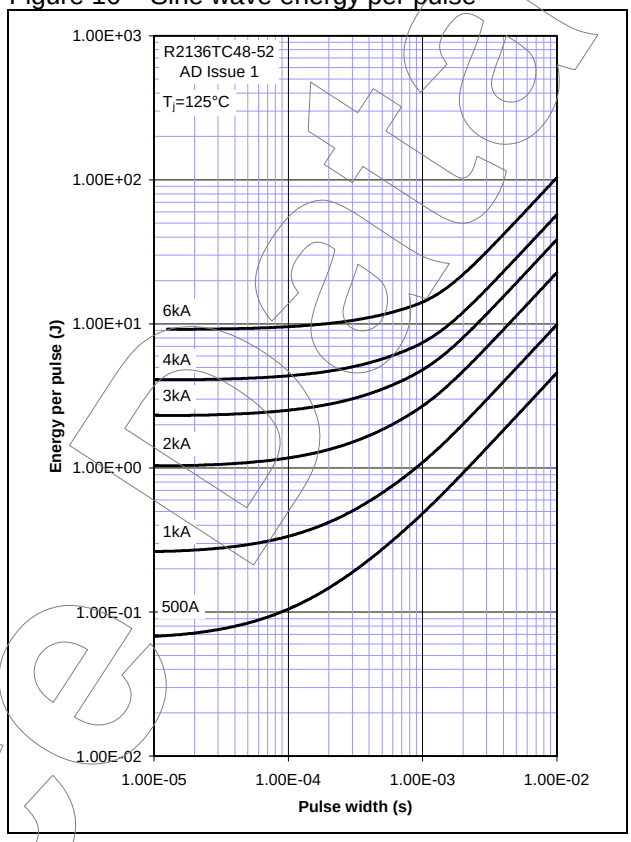

Figure 11 – Sine wave frequency ratings

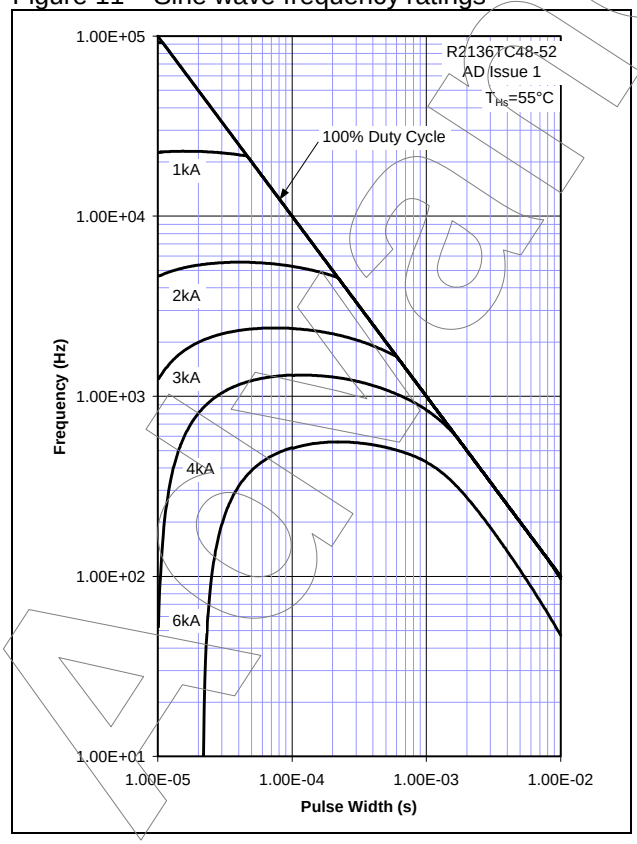

Figure 12 – Sine wave frequency ratings

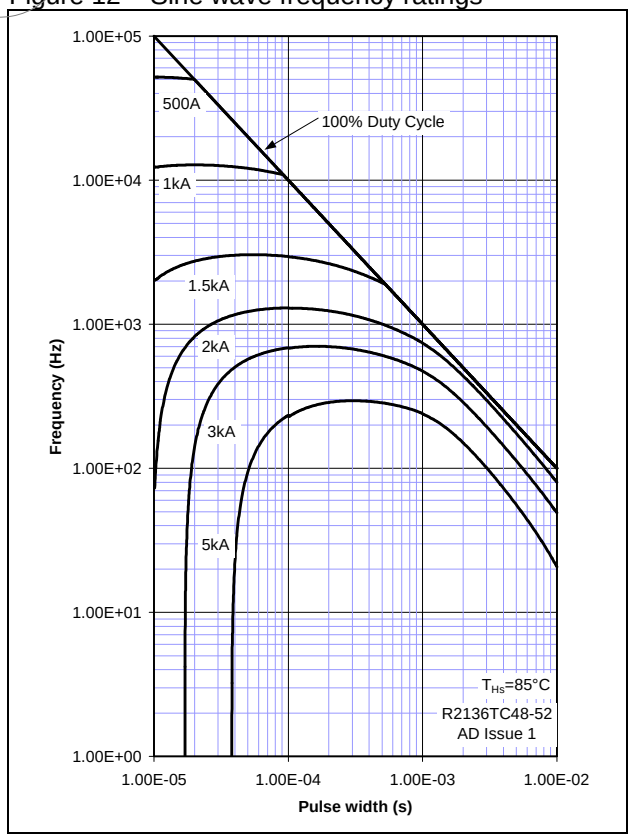

Figure 13 – Square wave frequency ratings

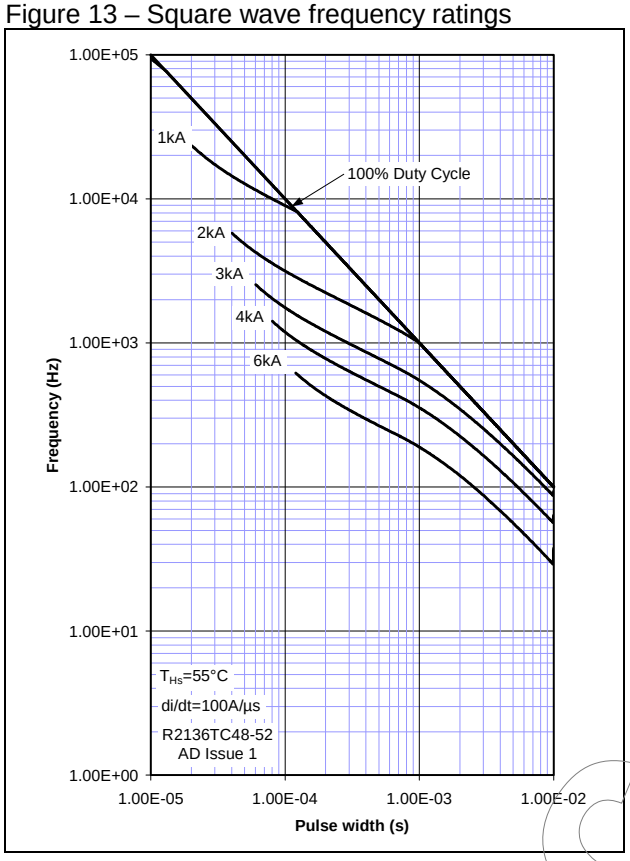

Figure 14 – Square wave frequency ratings

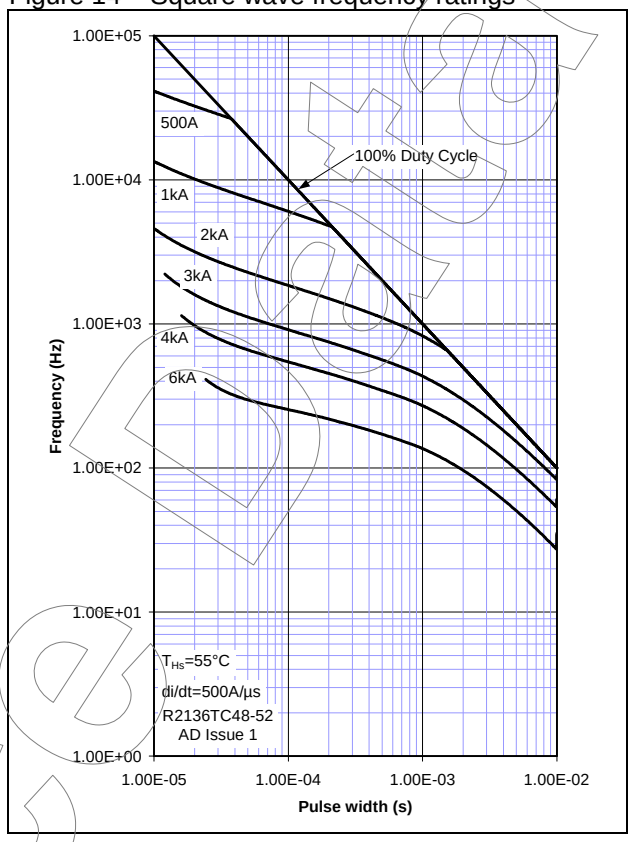

Figure 15 – Square wave frequency ratings

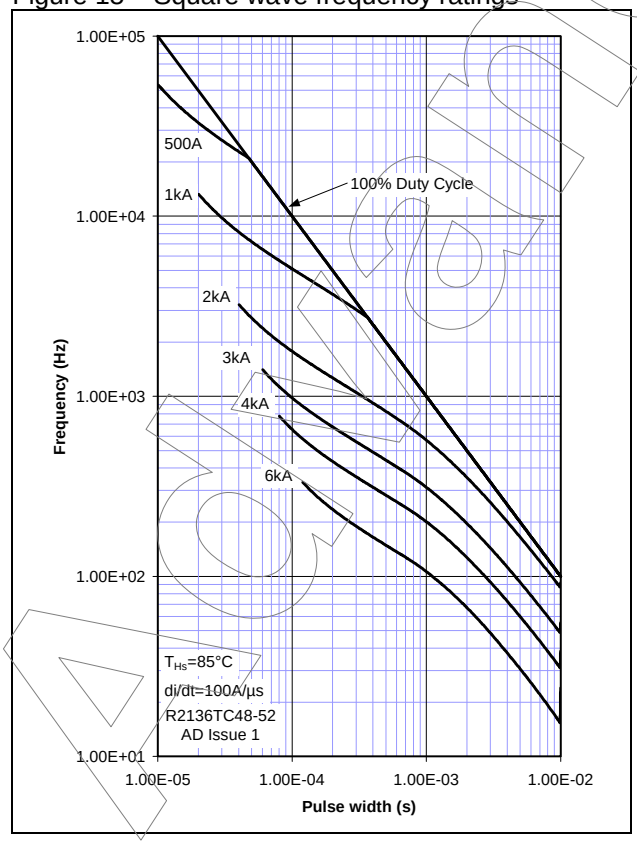

Figure 16 – Square wave frequency ratings

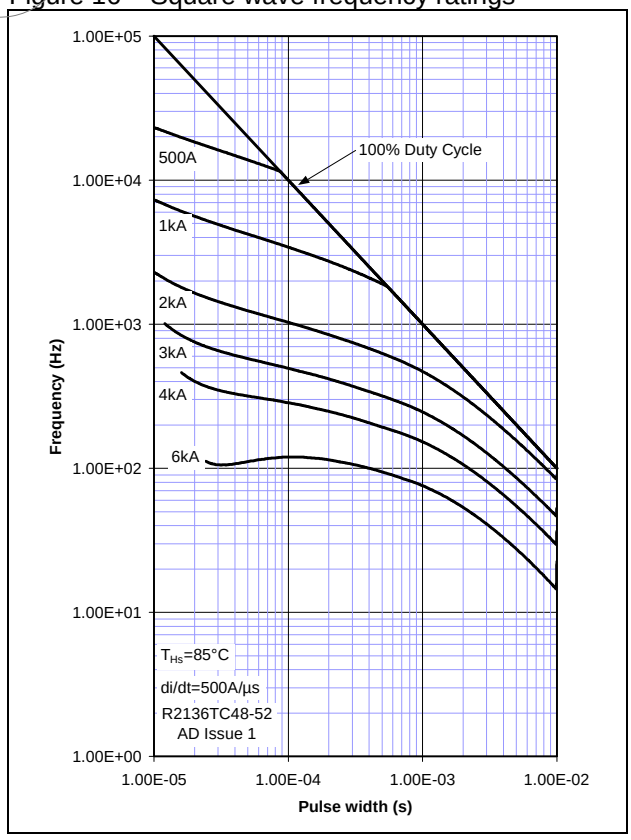

Figure 17 – Square wave energy per pulse

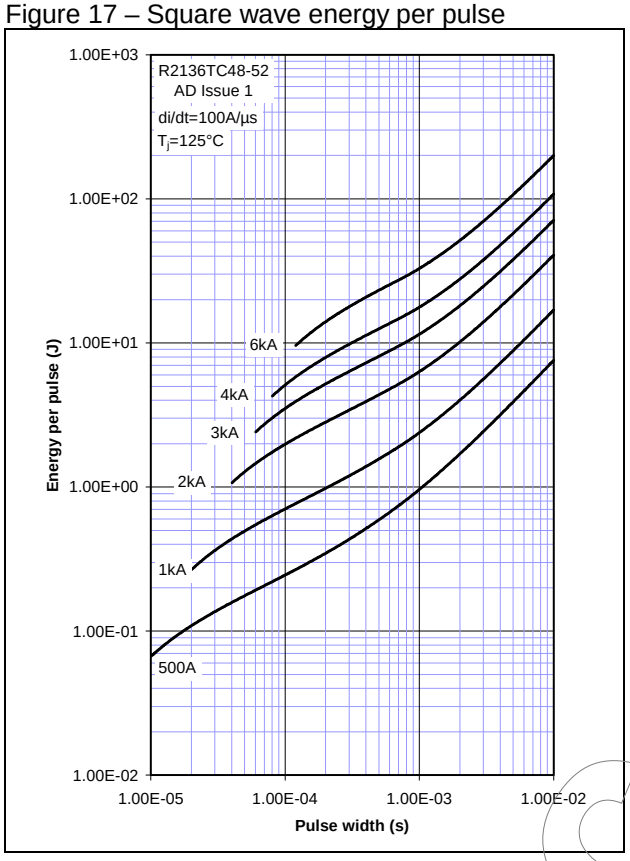

Figure 18 – Square wave energy per pulse

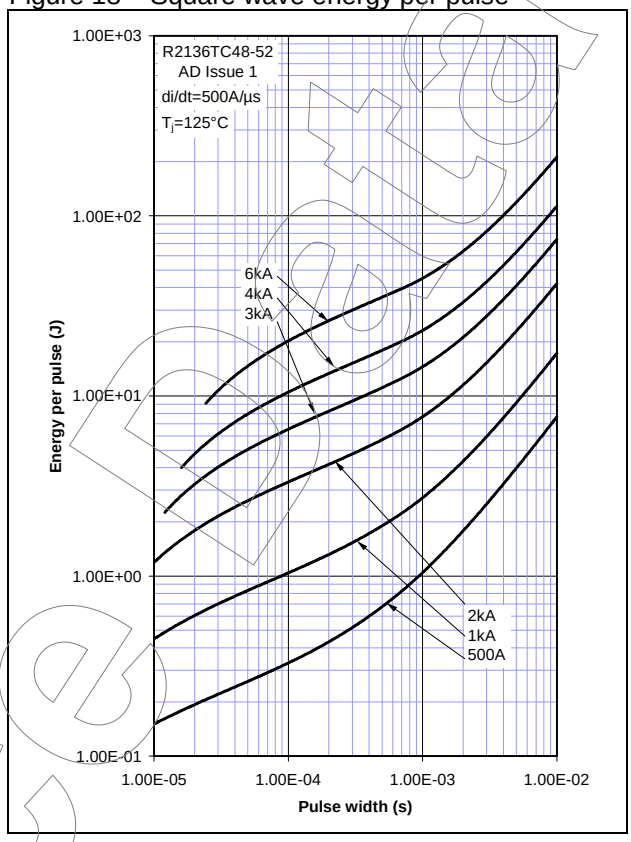

Figure 19 – Maximum surge and I^2t Ratings

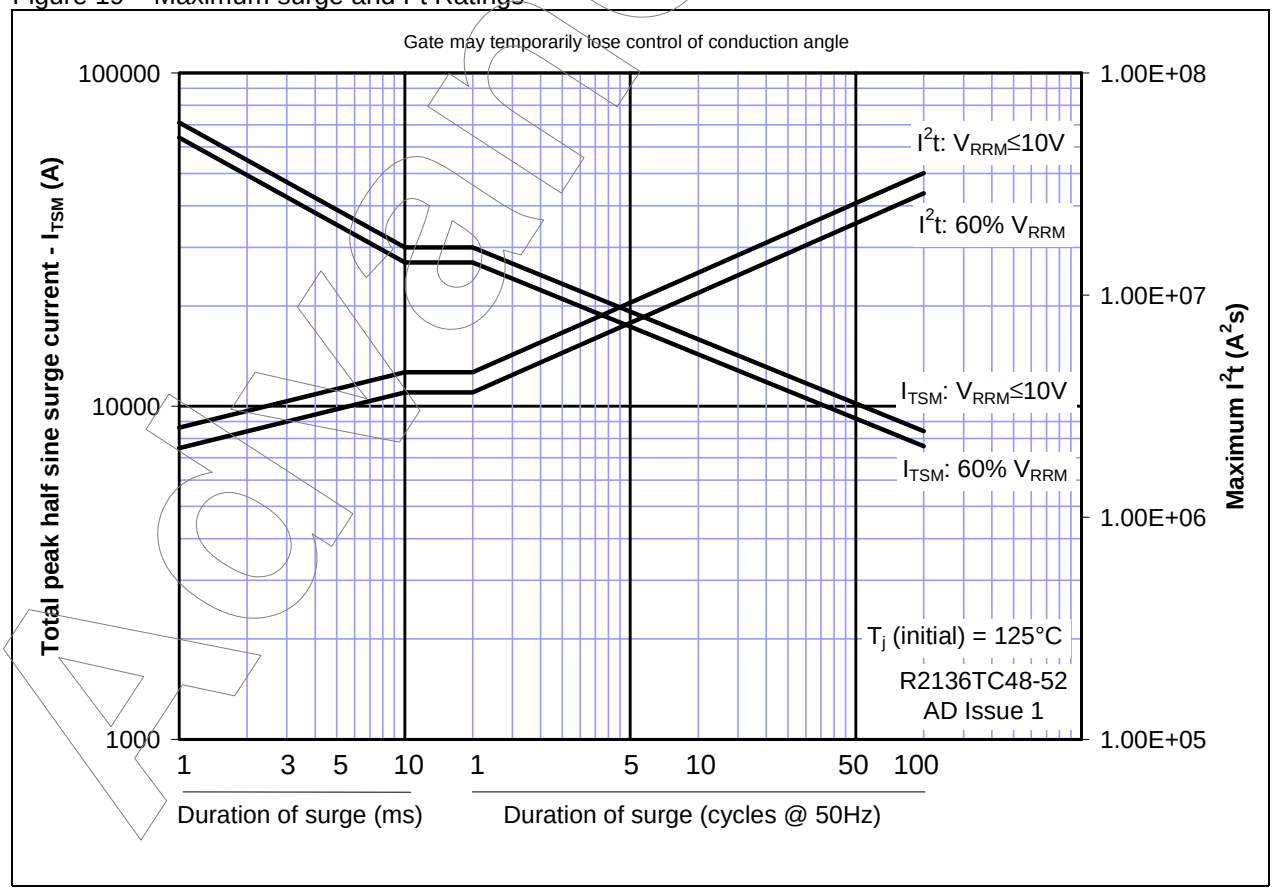

Advance Data

Outline Drawing & Ordering Information

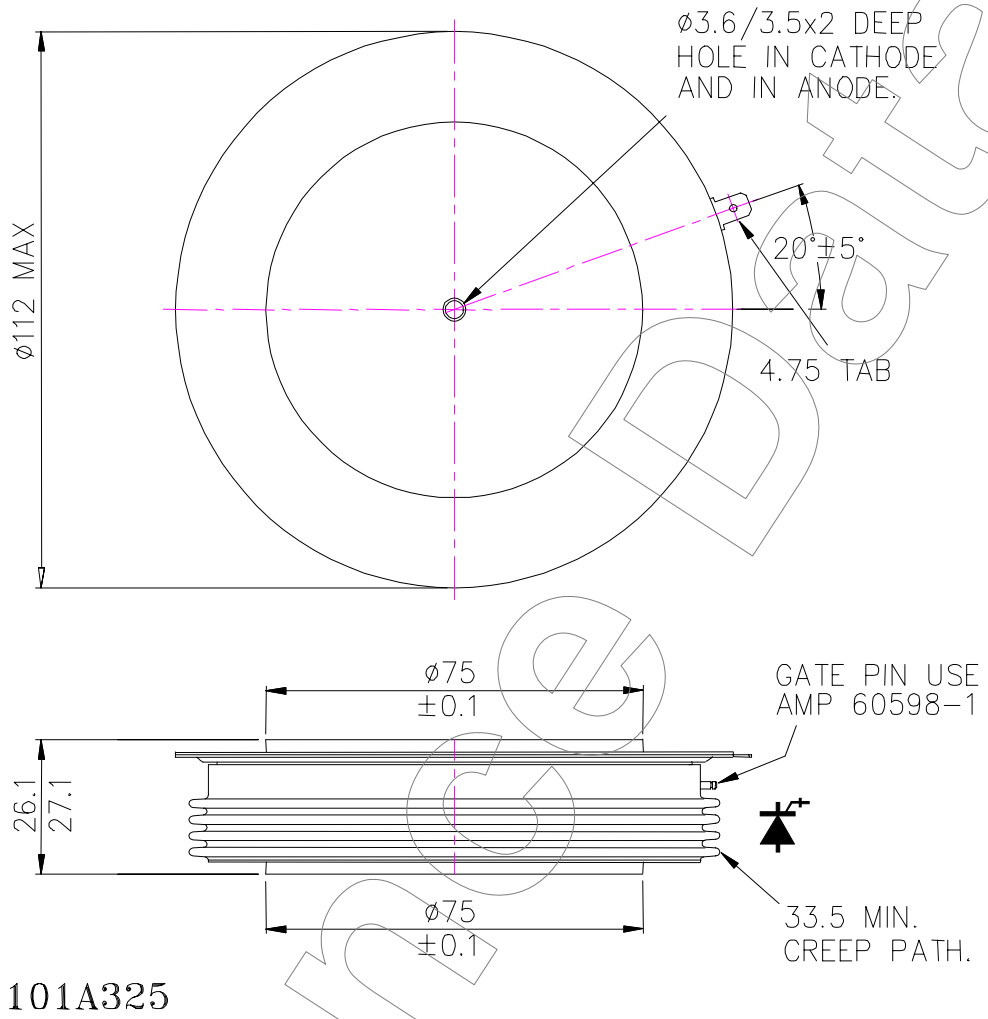

ORDERING INFORMATION		(Please quote 10 digit code as below)	
R2136	**TC**	♦ ♦	♦
Fixed Type Code	Fixed Outline Code	Off-state Voltage Code V_{DRM}/100 48-52	t_q Code (20V/µs) Y = 500µs, Z = 1000µs

Typical order code: R2136TC52Y – 5.2kV V_{DRM}, 500µs t_q, 27.7mm clamp height capsule.

WESTCODE

UK: Westcode Semiconductors Ltd.
P.O. Box 57, Chippenham, Wiltshire, England. SN15 1JL.
Tel: +44 (0) 1249 444524 Fax: +44 (0) 1249 659448
E-Mail: WSL.sales@westcode.com

USA: Westcode Semiconductors Inc.
3270 Cherry Avenue, Long Beach, California 90807
Tel: 562 595 6971 Fax: 562 595 8182
E-Mail: WSI.sales@westcode.com

Internet: http://www.westcode.com

The information contained herein is confidential and is protected by Copyright. The information may not be used or disclosed except with the written permission of and in the manner permitted by the proprietors Westcode Semiconductors Ltd.

© Westcode Semiconductors Ltd.

In the interest of product improvement, Westcode reserves the right to change specifications at any time without prior notice.

Devices with a suffix code (2-letter or letter/digit/letter combination) added to their generic code are not necessarily subject to the conditions and limits contained in this report.

Provisional Data Sheet