HiRel X-Band GaAs General Purpose MESFET

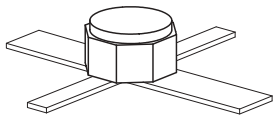

- HiRel discrete and Microwave semiconductor
- For professional pre- and driver- amplifiers
- For frequencies from 500MHz to 20GHz
- Hermetically sealed microwave package
- Low noise figure, high gain, moderate power
- ESA Space Qualification Expected 1998
  ESA/SCC Detail Spec. No.: 5613/008
  Type Variante No.s 01 to 05

ESD (**E**lectro**s**tatic **d**ischarge) sensitive device, observe handling precaution!

Type	Marking	Pin Configuration						Package
CFY25-20	-	1=G	2=S	3=D	4=S	-	-	MICRO-X
CFY25-20P	-	1=G	2=S	3=D	4=S	-	-	MICRO-X
CFY25-23	-	1=G	2=S	3=D	4=S	-	-	MICRO-X
CFY25-23P	-	1=G	2=S	3=D	4=S	-	-	MICRO-X
CFY25-P	-	1=G	1=S	3=D	4=S	-	-	MICRO-X

(ql) Testing level: P: Professional testing
H: High Rel quality
S: Space quality
ES: ESA qualified

CFY25-nnl: specifies noise, gain and output power level (see electrical characteristics)

Maximum Ratings

Parameter	Symbol	Value	Unit
Drain-source voltage	V_{DS}	5	V
Drain-gate voltage	V_{DG}	7	
Gate-source voltage (reverse/ forward)	V_{GS}	-5...0.5	
Drain current	I_D	80	mA
Gate forward current	I_G	1.5	
RF input power, C- and X-band[1)]	$P_{RF,in}$	17	dBm
Junction temperature	T_j	175	°C
Storage temperature	T_{stg}	-65...175	
Total power dissipation[2)]	P_{tot}	250	mW
Soldering temperature[3)]	T_{sol}	230	°C

Thermal Resistance

Parameter	Symbol	Value	Unit
Junction - soldering point	R_{thJS}	≤410	K/W

Electrical Characteristics (at T_A = 25 °C; unless otherwise specified)

Parameter	Symbol	Values			Unit
		min.	typ.	max.	
DC Characteristics					
Drain- source saturation current V_{DS} = 3 V, V_{GS} = 0 V	I_{DSS}	15	30	60	mA
Gate threshold voltage V_{DS} = 3 V, I_D = 1 mA	$-V_{Gth}$	0.3	1	3	V
Drain current pinch-off V_{DS} = 3 V, V_{GS} = -4 V	I_{Dp}	-	< 100	-	µA
Gate leakage current at pinch-off V_{DS} = 3 V, V_{GS} = -4 V	$-I_{Gp}$	-	< 100	200	
Transconductance V_{DS} = 3 V, I_D = 15 mA	g_{m15}	35	40	-	mS
Gate leakage current at operation V_{DS} = 3 V, I_D = 15 mA	$-I_{G15}$	-	< 1	2	µA
Thermal resistance junction to soldering point	R_{thJS}	-	370	-	K/W

[1]For $V_{DS} \leq 3$ V. For $V_{DS} >$ 3 V, derating is required.

[2]At T_s = +72.5 °C. For T_s > +72.5 °C derating is required.

[3]During 15 sec. maximum. Tthe same terminal shall not be resoldered until 3 minutes have elapsed.

Electrical Characteristics

Parameter	Symbol	Values			Unit
		min.	typ.	max.	
AC Characteristics					
Linear power gain[1)]	G_{lp}				dB
V_{DS} = 3 V, I_D = 20 mA, f = 12 GHz,					
P_{IN} = 0 dBm					
CFY25-20		-	9.2	-	
CFY25-23		-	8.5	-	
CFY25-20P, -P		8.5	9.2	-	
CFY25-23P		8	8.5	-	
Noise figure[2)]	NF				
V_{DS} = 3 V, I_D = 15 mA, f = 12 GHz					
CFY25-P		-	< 2.3	-	
CFY25-20, -20P		-	1.9	2.1	
CFY25-23. -23P		-	2.2	2.4	
Associated gain[2)]	G_a				
V_{DS} = 3 V, I_D = 15 mA, f = 12 GHz					
CFY25-P		-	>8.5	-	
CFY25-20, -20P		8.5	9	-	
CFY25-23, -23P		8	8.7	-	
Output power at 1 dB gain compression[1)]	P_{1dB}				dBm
V_{DS} = 3 V, $I_{D(RFoff)}$ = 20 mA, f = 12 GHz					
CFY25-20, -23		-	15	-	
CFY25-20, -23P, -P		14	15	-	

[1]Outout power/ linear power gain characteristics given for optimum output power machting conditions (fixed generic matching, no fine-tuning).
[2]Noise figure / associated gain characterisitcs given for minimum noise figure matching conditions (fixed generic matching, no fine- tuning).

Typical Common Source S-Paramters CFY25-20

V_{DS} = 3 V, I_D = 15 mA, Z_0 = 50 Ω

f	S_{11}		S_{21}		S_{12}		S_{22}		k-Fact.	S_{21}/S_{12}	MAG
GHz	MAG	ANG	MAG	ANG	MAG	ANG	MAG	ANG	MAG	dB	dB
0,5	0.958	-22	3.301	160	0.017	71	0.683	-14	0.44	22.9	-
1	0.931	-28	3.208	155	0.0287	64	0.673	-18	0.5	20.5	-
1.5	0.901	-36	3.107	148	0.0398	59	0.66	-23	0.54	18.9	-
2	0.875	-45	3.016	139	0.0502	53	0.648	-29	0.56	17.8	-
2.5	0.858	-56	2.95	130	0.0602	47	0.635	-35	0.55	16.9	-
3	0.838	-67	2.877	120	0.0691	42	0.621	-41	0.56	16.2	-
3.5	0.815	-78	2.795	111	0.0767	36	0.603	-48	0.58	15.6	-
4	0.794	-88	2.708	102	0.0834	31	0.59	-54	0.61	15.1	-
4.5	0.776	-98	2.621	93	0.0893	25	0.573	-60	0.64	14.7	-
5	0.76	-108	2.537	84	0.0939	20	0.562	-67	0.66	14.3	-
5.5	0.746	-117	2.451	76	0.0975	15	0.549	-73	0.69	14	-
6	0.732	-126	2.365	68	0.1	10	0.539	-80	0.72	13.7	-
6.5	0.718	-135	2.281	60	0.1017	5	0.529	-86	0.77	13.5	-
7	0.703	-143	2.202	52	0.1035	1	0.521	-91	0.81	13.3	-
7.5	0.689	-150	2.133	45	0.1049	-3	0.511	-96	0.87	13.1	-
8	0.674	-158	2.072	38	0.1056	-6	0.504	-101	0.92	12.9	-
8.5	0.661	-166	2.02	30	0.1063	-10	0.495	-106	0.97	12.8	-
9	0.65	-174	1.976	23	0.1068	-13	0.484	-111	1.02	12.7	11.7
9.5	0.64	178	1.933	16	0.1076	-16	0.474	-116	1.06	12.5	11
10	0.629	170	1.896	9	0.108	-20	0.463	-121	1.11	12.4	10.4
10.5	0.62	162	1.859	2	0.1084	-23	0.452	-127	1.16	12.3	9.9
11	0.613	153	1.826	-5	0.109	-26	0.443	-133	1.19	12.2	9.6
11.5	0.607	145	1.797	-13	0.1097	-29	0.436	-140	1.22	12.1	9.3
12	0.6	137	1.767	-20	0.1105	-33	0.431	-147	1.24	12	9.1
12.5	0.593	130	1.738	-27	0.1114	-36	0.426	-153	1.27	11.9	8.8
13	0.587	122	1.708	-34	0.1125	-40	0.421	-159	1.3	11.8	8.5
13.5	0.58	114	1.678	-41	0.1138	-43	0.419	-166	1.32	11.7	8.3
14	0.575	106	1.651	-49	0.1149	-47	0.417	-172	1.34	11.6	8.1
14.5	0.572	98	1.627	-56	0.1161	-51	0.413	-178	1.36	11.5	7.9
15	0.568	90	1.607	-63	0.118	-55	0.41	176	1.37	11.3	7.7
15.5	0.565	82	1.589	-70	0.1198	-59	0.408	170	1.37	11.2	7.6

Typical Common Source S-Paramters CFY25-20

V_{DS} = 3 V, I_D = 15 mA, Z_0 = 50 Ω

f	S_{11}		S_{21}		S_{12}		S_{22}		k-Fact.	S_{21}/S_{12}	MAG
GHz	MAG	ANG	MAG	ANG	MAG	ANG	MAG	ANG	MAG	dB	dB
16	0.565	73	1.57	-78	0.1219	-64	0.404	164	1.37	11.1	7.5
16.5	0.564	65	1.552	-86	0.1242	-69	0.402	157	1.36	11	7.4
17	0.564	57	1.548	-92	0.1266	-74	0.398	152	1.35	10.9	7.4
17.5	0.564	51	1.554	-98	0.1292	-78	0.396	147	1.32	10.8	7.4
18	0.567	47	1.562	-102	0.1319	-81	0.394	143	1.28	10.7	7.6

Typical Common Source S-Paramters CFY25-20

V_{DS} = 3 V, I_D = 30 mA, Z_0 = 50 Ω

f	S_{11}		S_{21}		S_{12}		S_{22}		k-Fact.	S_{21}/S_{12}	MAG
GHz	MAG	ANG	MAG	ANG	MAG	ANG	MAG	ANG	MAG	dB	dB
0.5	0.953	-24	3.987	159	0.014	74	0.657	-15	0.49	24.5	-
1	0.921	-30	3.858	153	0.0246	67	0.647	-18	0.53	22	-
1.5	0.892	-39	3.714	146	0.0346	60	0.634	-23	0.56	20.3	-
2	0.861	-49	3.583	138	0.0444	55	0.621	-28	0.59	19.1	-
2.5	0.836	-60	3.484	128	0.0543	49	0.608	-35	0.58	18.1	-
3	0.814	-72	3.374	118	0.0621	43	0.594	-41	0.6	17.4	-
3.5	0.79	-83	3.254	108	0.0684	38	0.576	-47	0.63	16.8	-
4	0.768	-94	3.129	99	0.0736	32	0.557	-53	0.67	16.3	-
4.5	0.749	-104	3.007	90	0.0779	27	0.541	-59	0.7	15.9	-
5	0.731	-114	2.89	82	0.081	22	0.527	-65	0.74	15.5	-
5.5	0.714	-124	2.776	73	0.0844	18	0.515	-72	0.78	15.2	-
6	0.699	-133	2.662	65	0.0863	14	0.505	-78	0.83	14.9	-
6.5	0.683	-141	2.556	57	0.088	10	0.498	-84	0.88	14.6	-
7	0.669	-149	2.458	50	0.0893	6	0.492	-89	0.93	14.4	-
7.5	0.657	-157	2.374	42	0.0904	3	0.486	-94	0.98	14.2	-
8	0.645	-165	2.299	35	0.0918	0	0.48	-99	1.02	14	13.1
8.5	0.632	-173	2.233	28	0.0933	-2	0.474	-103	1.07	13.8	12.2
9	0.62	179	2.174	21	0.0945	-5	0.467	-108	1.11	13.6	11.6
9.5	0.609	171	2.12	14	0.096	-8	0.459	-112	1.15	13.4	11.1
10	0.6	163	2.071	7	0.0976	-10	0.453	-118	1.18	13.3	10.7
10.5	0.592	154	2.026	0	0.099	-13	0.446	-123	1.21	13.1	10.4
11	0.586	146	1.984	-7	0.1006	-16	0.441	-129	1.23	12.9	10.1
11.5	0.579	138	1.947	-14	0.1026	-19	0.436	-136	1.24	12.8	9.8
12	0.574	130	1.91	-21	0.1047	-22	0.432	-142	1.25	12.6	9.6
12.5	0.571	123	1.876	-29	0.1066	-25	0.428	-149	1.26	12.5	9.4
13	0.566	115	1.842	-36	0.1088	-28	0.425	-155	1.27	12.3	9.2
13.5	0.563	107	1.806	-43	0.1108	-32	0.424	-16961	1.28	12.1	9
14	0.561	99	1.774	-50	0.114	-35	0.422	-167	1.27	11.9	8.8
14.5	0.559	91	1.745	-57	0.117	-39	0.421	-173	1.26	11.7	8.7
15	0.566	83	1.719	-64	0.1199	-43	0.419	-179	1.26	11.6	8.5
15.5	0.556	75	1.698	-72	0.1229	-48	0.417	175	1.24	11.4	8.4

Typical Common Source S-Paramters CFY25-20

V_{DS} = 3 V, I_D = 30 mA, Z_0 = 50 Ω

f	S_{11}		S_{21}		S_{12}		S_{22}		k-Fact.	S_{21}/S_{12}	MAG
GHz	MAG	ANG	MAG	ANG	MAG	ANG	MAG	ANG	MAG	dB	dB
16	0.556	66	1.676	-79	0.1257	-53	0.414	168	1.23	11.2	8.3
16.5	0.557	58	1.653	-87	0.1286	-58	0.412	162	1.23	11.1	8.2
17	0.559	50	1.646	-93	0.132	-63	0.41	157	1.2	11	8.3
17.5	0.561	45	1.649	-99	0.135	-67	0.409	152	1.16	10.9	8.4
18	0.565	40	1.656	-103	0.1376	-71	0.407	148	1.13	10.8	8.6

Micro-X Package

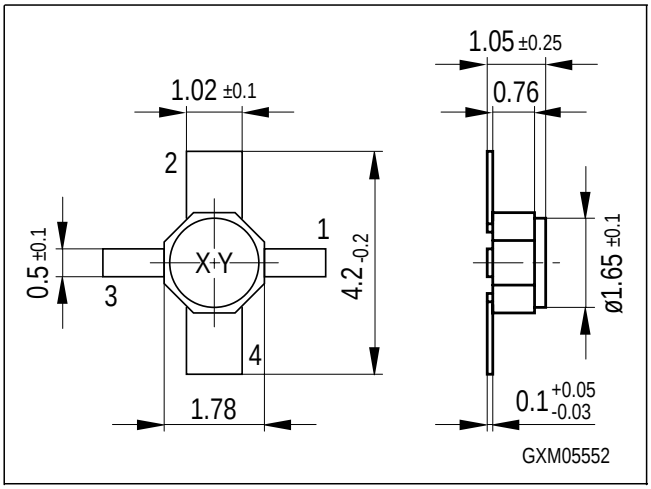

Edition 2006-02-01
Published by
Infineon Technologies AG
81726 München, Germany
© Infineon Technologies AG 2007.
All Rights Reserved.

Attention please!

The information given in this dokument shall in no event be regarded as a guarantee of conditions or characteristics (“Beschaffenheitsgarantie”). With respect to any examples or hints given herein, any typical values stated herein and/or any information regarding the application of the device, Infineon Technologies hereby disclaims any and all warranties and liabilities of any kind, including without limitation warranties of non-infringement of intellectual property rights of any third party.

Information

For further information on technology, delivery terms and conditions and prices please contact your nearest Infineon Technologies Office (**www.infineon.com**).

Warnings

Due to technical requirements components may contain dangerous substances. For information on the types in question please contact your nearest Infineon Technologies Office.
Infineon Technologies Components may only be used in life-support devices or systems with the express written approval of Infineon Technologies, if a failure of such components can reasonably be expected to cause the failure of that life-support device or system, or to affect the safety or effectiveness of that device or system.
Life support devices or systems are intended to be implanted in the human body, or to support and/or maintain and sustain and/or protect human life. If they fail, it is reasonable to assume that the health of the user or other persons may be endangered.