Tous droits strictement reserves. Reproduction ou communication a des tiers interdite sous quelque forme que ce soit sans autorisation ecrite du propietaire. Propriete de©FCI. Droits de reproduction FCI.

All rights strictly reserved. Reproduction or issue to third parties in any form whatever is not permitted without written authority from the proprietor. Property of©FCI Copyright FCI.

PRODUCT NO.
SEE PRODUCT NUMBER CODE

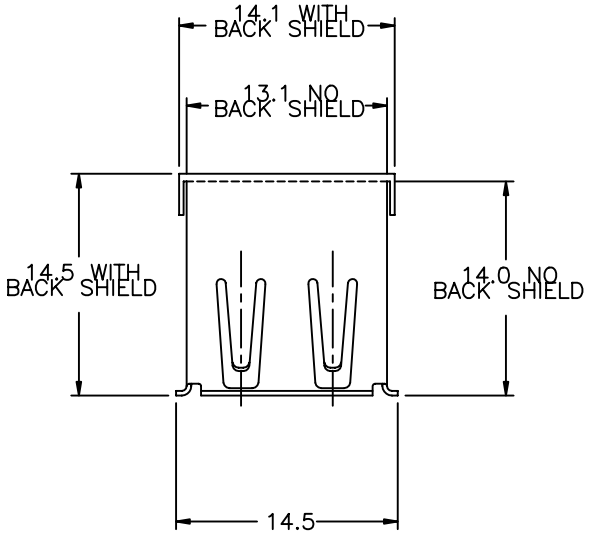

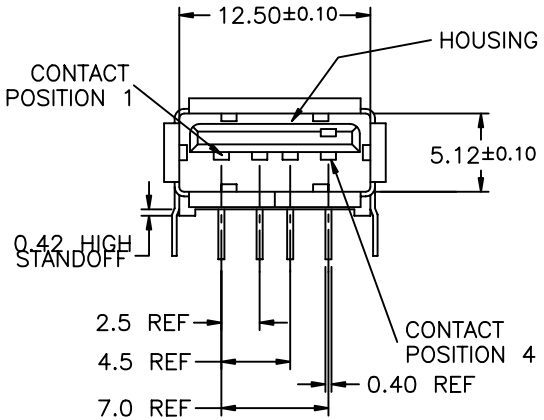

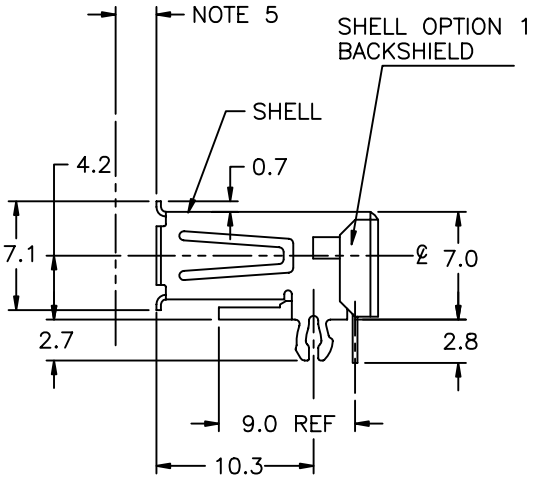

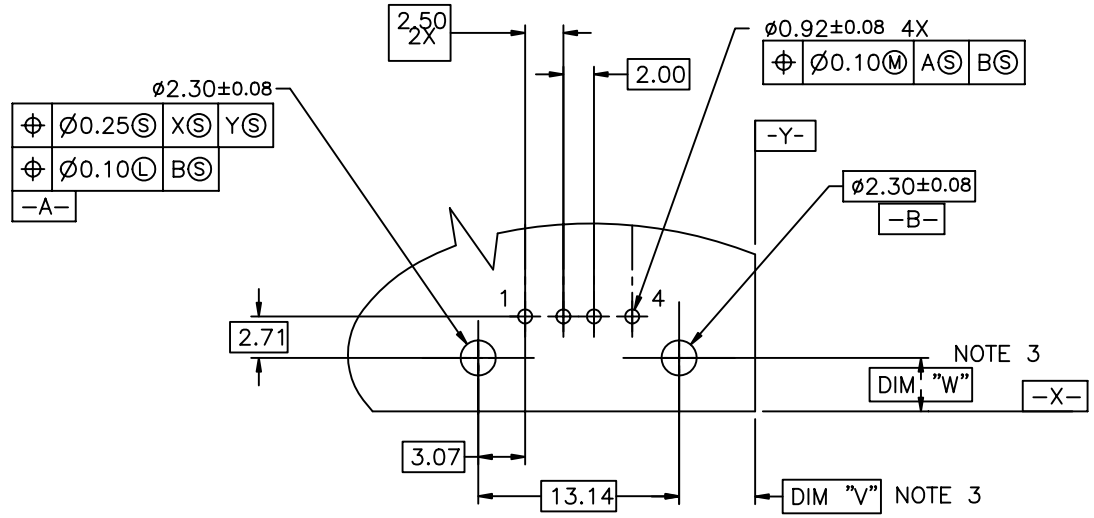

P.C. BOARD LAYOUT

NOTES:

1. MATERIAL:
   CONTACTS: COPPER ALLOY
   SHELL: COPPER ALLOY
   HOUSING: UL 94V-0 RATED THERMOPLASTIC
2. PLATING:
   CONTACTS: SEE PRODUCT NUMBER CODE
   SHELL: 2.5µm BRIGHT TIN OVER NICKEL UNDERPLATE
   SEE PRODUCT NUMBER CODE
3. DATUM AND BASIC DIMENSIONS ESTABLISHED BY CUSTOMER
4. RECOMMENDED PC BOARD THICKNESS OF 1.57mm
5. 2.67mm MAXIMUM PANEL THICKNESS IF MOUNTED BEHIND PANEL
6. CONTACT PLATING CODE OPTION 1 DOES NOT MEET THE PLATING SPECIFIED PER UNIVERSAL SERIAL BUS SPECIFICATION REVISION 1.0
7. PRODUCT SPEC GS-12-095 & PACKAGING SPEC GS-14-393.
8. COMPLIED WITH USB 2.0 & TID NUMBER 60000204
9. 87520-1010XX, -1012XX,3010XX,-3012XX , -5010XX, -6010XX AND -7010XXLF DURABILITY MET 5000 CYCLES THE OTHER DASH NUMBER MET USB 2.0 DURABILITY 1500 CYCLES.

(TO BE CONTINUED)

mat'l. code NOTE 1 & 2				tolerances unless otherwise specified			CUSTOMER COPY	FCI www.fciconnect.com	
ltr	ecn no	dr	date		.X ±.25				
AB	N05-0068	PH	03/09/05	linear	.XX		projection	title UNIV. SERIAL BUS RECEPTACLE	
AC	N05-0089	PH	03/24/05		.XXX				
AD	N05-0176	PH	06/20/05	angles	0° ±2°				
AE	N06-0101	HB	04/13/06	dr	FUSSELMAN	3/1/96	mm	product family USB	code –
AF	N07-0176	WG	07/31/07	engr	J. DAVID	3/1/96		size A4 dwg no 87520	sheet 1 of 2
				chr	J. DAVID	6/5/96	scale 4 : 1		
				appd	J. DAVID	6/5/96			
sheet index	revision	AF	AF						
	sheet	1	2						

form no. 7530-001-103

PDM: Rev:AF

STATUS: Released

cage code 22526

Printed Sep 26, 2007

Tous droits strictement reserves. Reproduction ou communication a des tiers interdite sous quelque forme que ce soit sans autorisation ecrite du propietaire. Propriete de©BERG ELECTRONICS. Droits de reproduction BERG ELECTRONICS INC.

All rights strictly reserved. Reproduction or issue to third parties in any form whatever is not permitted without written authority from the proprietor. Property of©BERG ELECTRONICS Copyright BERG ELECTRONICS INC.

PRODUCT NUMBER CODE

87520– X X X X X P S LF

BASE PRODUCT NUMBER

HOUSING COLOR OPTIONS
- 0 – WHITE+SHELL TIN & NICKEL PLATING
- 1 – BLACK+SHELL TIN & NICKEL PLATING
- 2 – WHITE+SHELL NICKEL PLATING ONLY
- 3 – BLACK+SHELL NICKEL PLATING ONLY
- 4 – WHITE FR50 + SHELL TIN & NICKEL PLATING FOR NON LEAD FREE P/N'S CHANGE WHITE FR50 TO WHITE PA46 FOR LEAD FREE P/N'S
- 5 – BLACK NYLON 66 + SHELL TIN & NICKEL PLATING FOR NON LEAD FREE P/N'S CHANGE BLACK NYLON 66 TO BLACK PA46 FOR LEAD FREE P/N'S
- 6 – WHITE FR50+SHELL TIN & NICKEL PLATING FOR NON LEAD FREE P/N'S CHANGE WHITE FR50 TO WHITE PA46 FOR LEAD FREE P/N'S
- 7 – WHITE PA46+SHELL TIN & NICKEL PLATING

SHELL OPTION
- 0 – NO BACK SHIELD, SEE STYLE 1 FOR DURABILITY 1500 CYCLES SEE STYLE 4 FOR DURABILITY 5000 CYCLES
- 1 – BACK SHIELD, SEE STYLE 2
- 2 – PARTIAL BACK SHIELD, SEE STYLE 3

MOUNTING HOLE OPTIONS
- 1 – NONE

TERMINAL PLATING OPTION
- 0 – 1.25um Ni UNDERPLATE 0.76um GXT CONTACT AREA 2.50um TIN/LEAD TAIL AREA FOR P/N'S
- 2 – 1.25um Ni UNDERPLATE 0.76um /30u" GOLD CONTACT AREA 2.50um TIN/LEAD TAIL AREA FOR P/N'S

PACKAGING OPTIONS
- A – TAPE AND REEL
- B – TUBES

DATE CODE

ONLY FOR PANASONIC

LEAD FREE OPTION
- P/N'S WITH SUFFIX "LF" MEAN LEAD FREE PRODUCT
- FOR LEAD FREE P/N, CHANGE ALL ORIGINAL TIN/LEAD PLATING TO PURE TIN PLATING

(CONTINUED)

10. PACKING STANDARD GS–14–920 WILL BE APPLIED FOR LEAD FREE P/N'S
11. FOR LEAD FREE P/N, THE PRODUCT MEET EUROPEAN UNION DIRECTIVES AND OTHER COUNTRY REGULATION AS DESCRIBED IN GS–22–008
12. THE HOUSING WILL WITHSTAND EXPOSURE TO 260°C PEAK TERMERATURE FOR 40 SECONDS IN A CONVECTION, INFRO–RED OR VAPOR PHASE REFLOW OVEN.
13. 87520–1010BLF CAN WITHSTAND 2 Amps CURRENT (TESTING PLUG WITH 20 AWG WIRE).

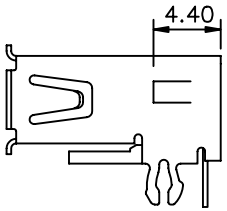

STYLE 4 WITHOUT BACK SHELL

FOR 87520–1010XX/1010XXLF
–1012XX/1012XXLF
–3010XX/3010XXLF
–3012XX/3012XXLF
–5012XX/5012XXLF
–6010XX/6010XXLF
–7010XXLF/7010XXSLF

Available p/n's in FCI are followed

87520–0010XX/0010XXLF
87520–0012XX/0012XXLF
87520–0210XX/0210XXLF
87520–1010XX/1010XXLF
87520–1012XX/1012XXLF
87520–0110XX/0110XXLF
87520–0112XX/0112XXLF
87520–1110XX/1110XXLF
87520–1112XX/1112XXLF
87520–2010XX/2010XXLF
87520–2012XX/2012XXLF
87520–2110XX/2110XXLF
87520–2112XX/2112XXLF
87520–2210XX/2210XXLF
87520–3010XX/3010XXLF
87520–3012XX/3012XXLF
87520–3110XX/3110XXLF
87520–3112XX/3112XXLF
87520–4010XX/4010XXLF
87520–4110XX/4110XXLF
87520–5010XX/5010XXLF/5010XXSLF
87520–5110XX/5110XXLF
87520–6010XX/6010XXLF
87520–7010XXLF/7010XXLFS

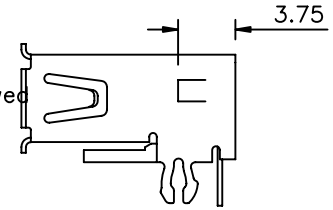

STYLE 1 WITHOUT BACK SHELL

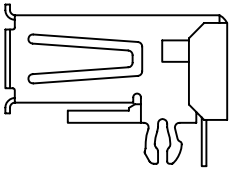

STYLE 2 WITH BACK SHELL

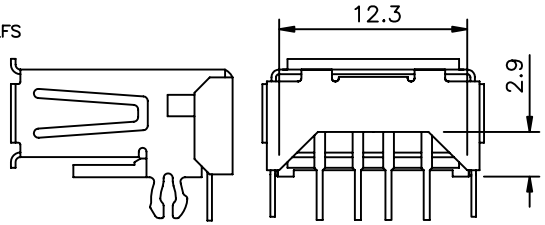

STYLE 3 WITH PARTIAL BACK SHELL

mat'l. code NOTE 1 & 2				tolerances unless otherwise specified			CUSTOMER COPY	FCI www.fciconnect.com	
ltr	ecn no	dr	date	linear	.X ±.25		projection	title UNIV. SERIAL BUS RECEPTACLE	
AF					.XX				
					.XXX				
				angles	0° ±2°				
				dr	FUSSELMAN	3/1/96	mm	product family USB	code –
				engr	J. DAVID	3/1/96		size A4 dwg no 87520	sheet 2 of
				chr	J. DAVID	6/5/96	scale 4 : 1		
				appd	J. DAVID	6/5/96			
sheet index	revision sheet								

cage code 22526