TOSHIBA Bipolar Linear Integrated Circuit Silicon Monolithic

TA2145AFG

3 V Stereo Headphone Amplifier (3 V USE)

The TA2145AFG is developed for play-back stereo headphone equipments (3 V USE).
It is built in dual preamplifiers, dual OCL power amplifiers, motor governor, DC volume control and preamplifier on/off switch etc.

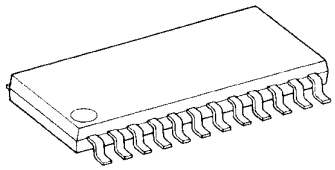

Weight: 0.32 g (typ.)

Features

- Built-in preamplifier
  Input coupling condenser-less
  Built-in input capacitor for reducing buzz noise
  Low noise: V_{ni} = 1.2 μVrms (typ.)
  Preamplifier on/off switch.
- Built-in power amplifier
  OCL (Output condenser-less)
  Voltage gain: G_V = 31 dB (typ.)
- Built-in motor governor (Current proportion type)
- Built-in DC volume control function
  ATT = 82dB (Ta = 25°C, typ.)
- Built-in bass boost function
- Low supply current (V_{CC} = 3 V, f = 1 kHz, PRE OUT = 100 mVrms, Ta = 25°C, typ.)
  - Quiescent supply current
    PRE + PW: I_{CCQ} = 8.5 mA
    GVN: I_{CC} = 2.5 mA
  - 0.1 mW × 2 ch output
    I_{CC1} = 9.8 mA (R_L = 32 Ω)
    I_{CC2} = 10.5 mA (R_L = 16 Ω)
  - 0.5 mW × 2 ch output
    I_{CC3} = 14.0 mA (R_L = 32 Ω)
    I_{CC4} = 16.5 mA (R_L = 16 Ω)
- Operating supply voltage range (Ta = 25°C)
  $V_{CC\ (opr)}$ = 1.8~3.6 V
  GVN $V_{CC\ (opr)}$ = 2.1~3.6 V (Motor voltage = 1.8 V)

Block Diagram

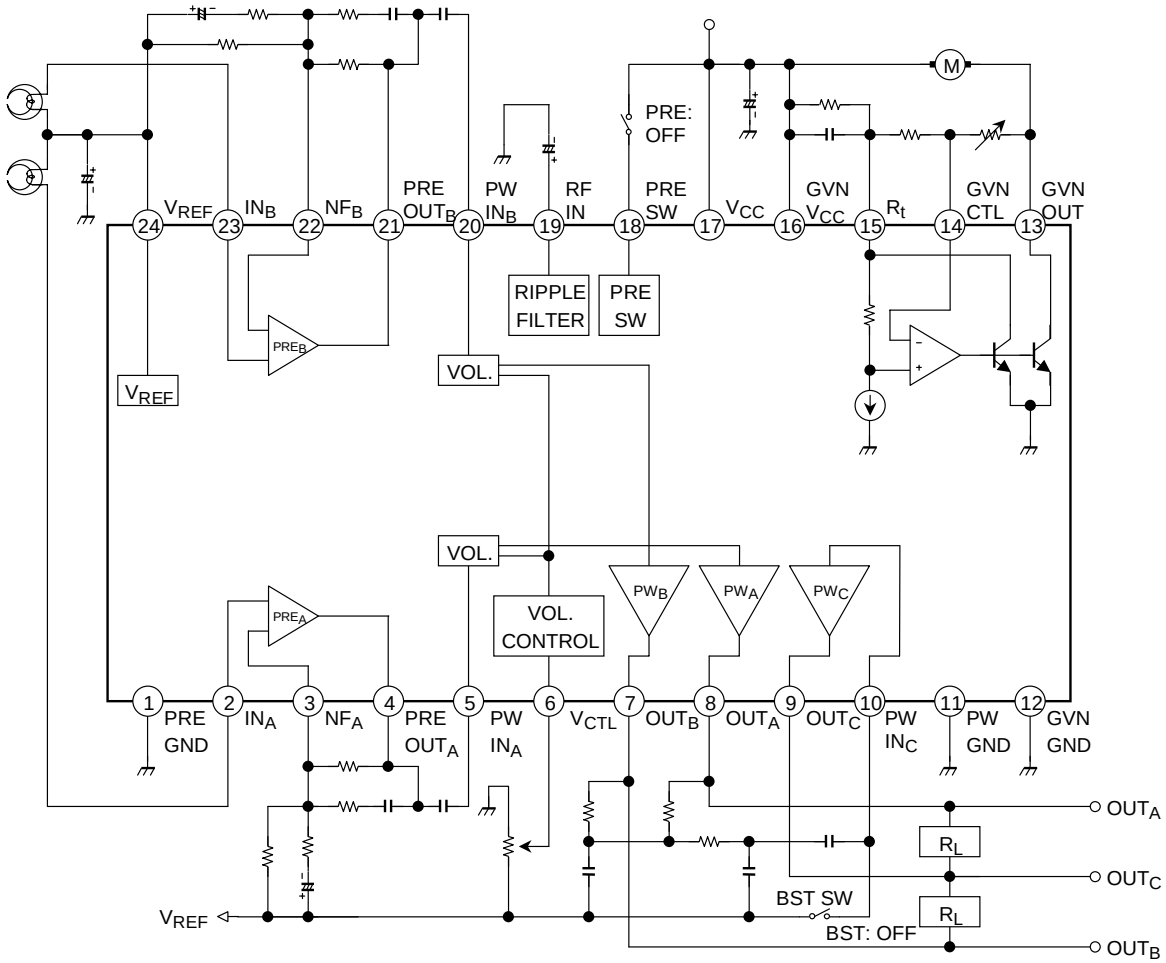

Terminal Explanation (Terminal Voltage: Typical terminal voltage at no signal with test circuit, V_{CC} = 3 V, Ta = 25°C)

Terminal No.	Terminal Name	Function	Internal Circuit	Terminal Voltage (v)
1	PRE GND	The GND, except for power drive stage and motor governer stage.	—	0
2	IN_A	Input of preamplifier	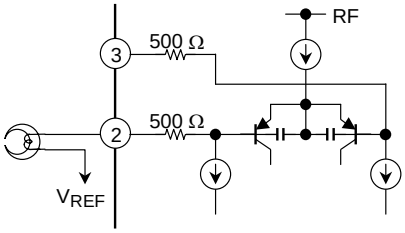	1.2
23	IN_B			
3	NF_A	NF of preamplifier		1.2
22	NF_B			
4	PRE OUT_A	Output of preamplifier	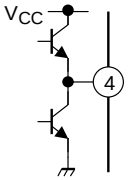	1.2
21	PRE OUT_B			
7	OUT_B	Output of power amplifier		
8	OUT_A			
9	OUT_C			
5	PW IN_A	Input of power amplifier	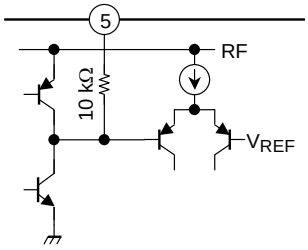	1.2
20	PW IN_B			
6	V_{CTL}	The terminal of DC volume control	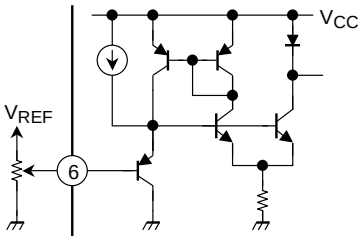	—

Terminal No.	Terminal Name	Function	Internal Circuit	Terminal Voltage (v)
10	PW IN_C	Input of center amplifier	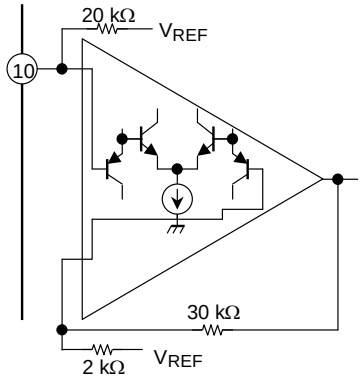	1.2
11	PW GND	GND for power drive stage	—	0
12	GVN GND	GND for motor governor stage	—	0
13	GVN OUT	Motor terminal	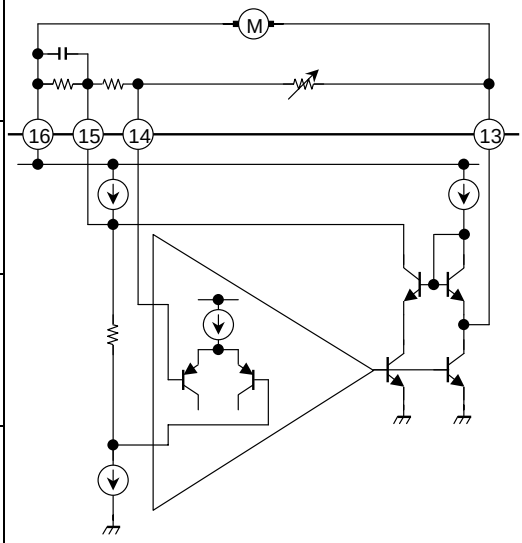	—
14	GVN CTL	The terminal of motor speed control		—
15	Rt	The terminal of amateur compensation resistor		—
16	GVN V_{CC}	V_{CC} for motor governor stage		3
17	V_{CC}	V_{CC} for preamplifier stage and power amplifier stage.	—	3
18	PRE SW	Muting switch of preamplifier Preamp. on: “L” level/open Preamp. off: “H” level Refer to application note	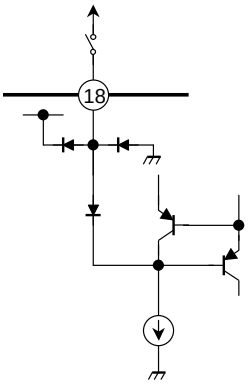	—

Terminal		Function	Internal Circuit	Terminal Voltage (v)
No.	Name			
19	RF IN	Ripple filter of power supply	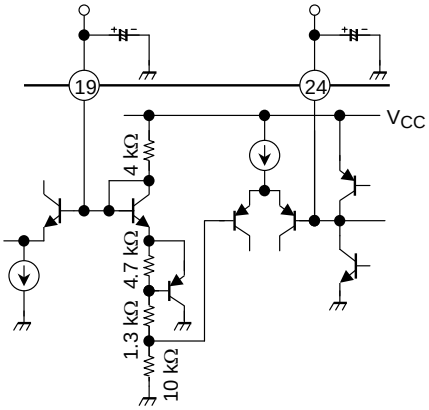	2.5
24	V_{REF}	Reference voltage Preamplifier and power amplifier operate on this reference.		1.2

Application Note

- V_{CC} and GND

  This IC has two V_{CC} terminals and three GND terminals. Pattern layout should be designed carefully to reduce the common impedance.

  - V_{CC}

    V_{CC} (pin 17) ---------- Preamplifier stage and power amplifier stage.
    GVN V_{CC} (pin 16)--------- Motor governor stage.

  - GND

    PRE GND (pin 1)---------- Preamplifier stage, and power amplifier stage except for the power drive stage.
    PW GND (pin 11)---------- Power drive stage of power amplifier.
    GVN GND (pin 12)--------- Motor governor stage.

- V_{REF}

  It is necessary to stabilize the V_{REF} circuit, because the internal circuit operate on this reference.

- RF IN

  As this terminal is an input terminal of the ripple filter, it cannot supply a power supply to other ICs etc.

- Preamplifier

  Input signal should be applied to V_{REF} standard, otherwise pop noise become bigger when V_{CC} is turned on and off.

- Power amplifier

  It is necessary to insert the coupling capacitor through the PW IN terminal. In case that DC current or DC voltage is applied to the PW IN terminal, the internal circuit has unbalance and the power amplifier doesn't operate normally.

- Operating supply voltage range of motor governor stage

  As for the minimum of operating supply voltage range, the motor voltage is 1.8 V.
  In case that it is more than 1.8 V, the low voltage performance becomes bad.

- PRE SW sensitivity (Ta = 25°C)

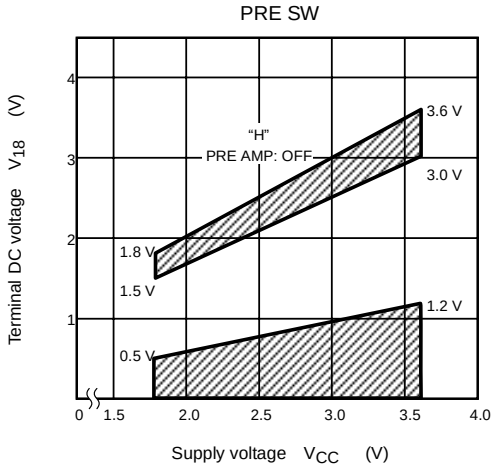

Absolute Maximum Ratings (Ta = 25°C)

Characteristic	Symbol		Rating	Unit
Supply voltage	V_{CC}		4	V
Power dissipation	P_D	(Note 1)	400	mW
		(Note 2)	925	
Output current (PW AMP.)	$I_{O\ (PW)}$		200	mA
Output current (GVN)	$I_{O\ (GVN)}$		700	mA
Operating temperature	T_{opr}		−25~75	°C
Storage temperature	T_{stg}		−55~150	°C

Note 1: IC only: Derated above Ta = 25°C in the proportion 3.2 mW/°C

Note 2: IC + PCB (TOSHIBA typical PCB): Derated above Ta = 25°C in the proportion7.4 mW/°C

Electrical Characteristics

(Unless otherwise specified, V_{CC} = 3 V, Ta = 25°C, f = 1 kHz, SW2: a, SW5: OPEN
Preamplifier: R_g = 2.2 kΩ, R_L = 10 kΩ, SW1: ON, SW3: b, SW4: b
Power amplifier: R_g = 600 Ω, R_L = 16 Ω, Vol.: max, SW1: OPEN, SW3: a, SW4: a
Motor governor: I_m = 100 mA, SW1: OPEN, SW3: b, SW4: b)

	Characteristic	Symbol	Test circuit	Test condition	Min	Typ.	Max	Unit
	Quiescent supply current	I_{CCQ1}	—	Pre off, V_{in} = 0, Vol.: min, SW4: b, SW5: ON	—	7.5	13	mA
		I_{CCQ2}	—	V_{in} = 0, Vol.: min, SW4: b	—	8.5	14.5	
Pre amp.	Open loop voltage gain	G_{VO}	—	V_o = −10dBV, SW2: b	—	86	—	dB
	Closed loop voltage gain	G_{VC}	—	V_o = −10dBV	—	35	—	dB
	Maximum output voltage	V_{om}	—	THD = 1%	550	720	—	mVrms
	Total harmonic distortion	THD1	—	V_o = −10dBV	—	0.02	0.3	%
	Equivalent input noise voltage	V_{ni}	—	R_g = 2.2 kΩ, SW1: OPEN BPF = 20 Hz~20 kHz, NAB (G_V = 35dB, f = 1 kHz)	—	1.2	2.4	μVrms
	Cross talk	CT1	—	V_o = −10dBV	—	70	—	dB
	Ripple rejection ratio	RR1	—	f_r = 100 Hz, V_r = −20dBV	—	48	—	dB
	Preamplifier muting attenuation	ATT1	—	V_o = −10dBV, SW5: OPEN → ON	—	80	—	dB
	Preamplifier on voltage	$V_{18\ (ON)}$	—	V_{CC} = 1.8 V	0	—	0.5	V
	Preamplifier off voltage	$V_{18\ (OFF)}$	—		1.5	—	1.8	V
Power amp.	Voltage gain	G_V	—	V_o = −10dBV	29	31	33	dB
	Channel balance	CB	—	V_o = −10dBV	−1.5	0	+1.5	dB
	Output power 1	P_{o1}	—	R_L = 16 Ω, THD = 10%	17	28	—	mW
	Output power 2	P_{o2}	—	R_L = 32 Ω, THD = 10%	—	20	—	mW
	Total harmonic distortion	THD2	—	P_o = 1m W	—	0.5	—	%
	Output noise voltage	V_{no}	—	R_g = 600 Ω, SW3: b BPF = 20 Hz~20 kHz	—	270	400	μVrms
	Ripple rejection ratio	RR2	—	f_r = 100 Hz, V_r = −20dBV	—	52	—	dB
	Cross talk	CT2	—	V_o = −10dBV	—	32	—	dB
	Dc volume maximum attenuation	ATT2	—	V_o = −10dBV, SW4: a→b (Vol.: max → min)	—	82	—	dB
Motor governor	Supply current	I_{CC}	—	I_m = 0	—	2.5	3.5	mA
	Saturation voltage	$V_{CE\ (sat)}$	—	I_m = 200 mA	—	—	0.5	V
	Reference voltage	ΔV_{REF}	—	I_m = 100 mA	0.76	0.81	0.86	V
	Reference voltage fluctuation 1	ΔV_{REF1}	—	V_{CC} = 2.1~3.6 V	—	0.25	—	%/V
	Reference voltage fluctuation 2	ΔV_{REF2}	—	I_m = 25~250 mA	—	0.003	—	%/mA
	Reference voltage fluctuation 3	ΔV_{REF3}	—	Ta = −25~75°C	—	0.005	—	%/°C
	Current ratio	K	—	—	34.5	37.5	40.5	
	Current ratio fluctuation 1	ΔK1	—	V_{CC} = 2.1~3.6 V	—	0.25	—	%/V
	Current ratio fluctuation 2	ΔK2	—	I_m = 25~250 mA	—	0.08	—	%/mA
	Current ratio fluctuation 3	ΔK3	—	Ta = −25~75°C	—	0.005	—	%/°C

Test Circuit

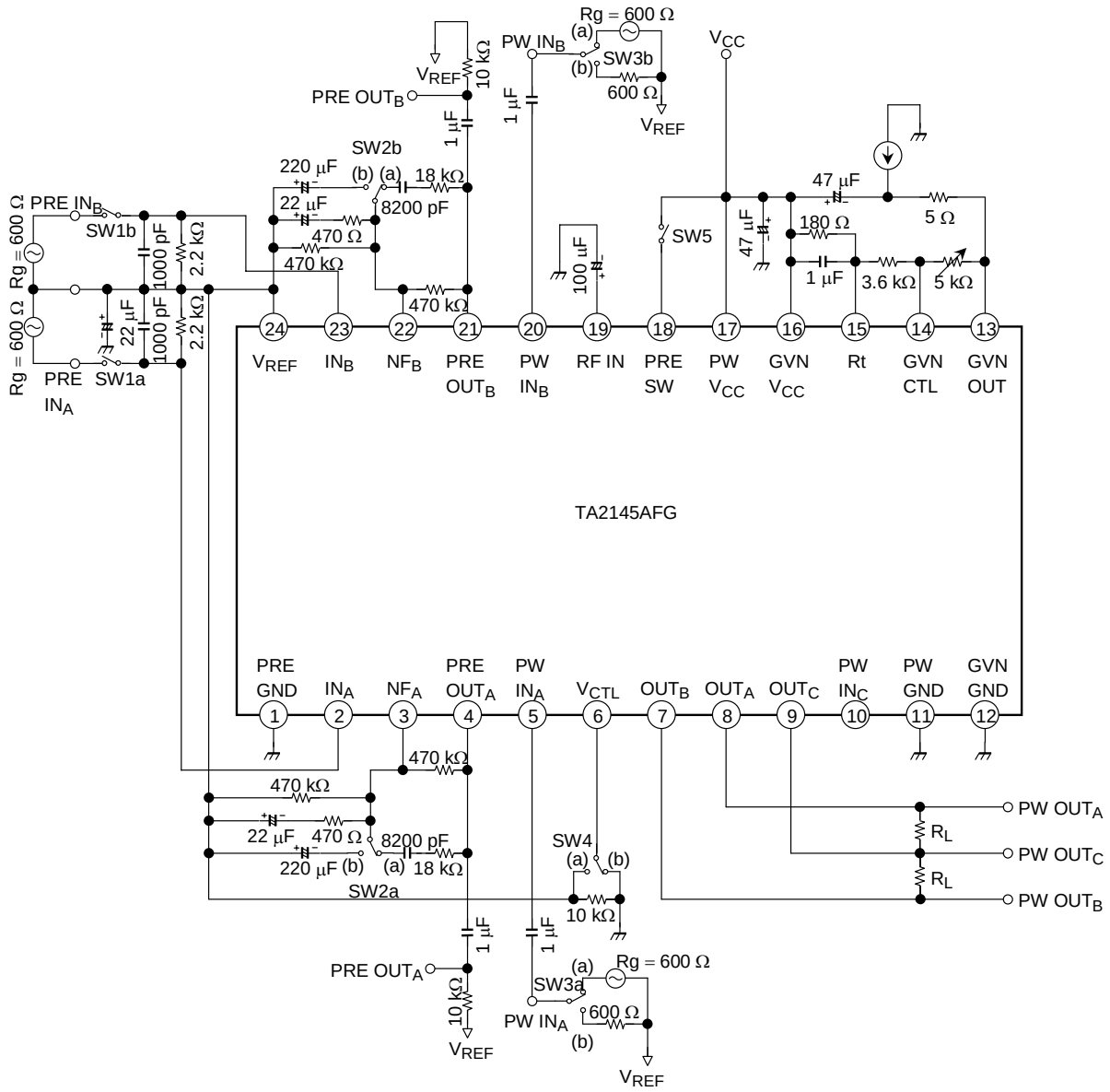

Characteristic Curves (Unless otherwise specified, V_{CC} = 3 V, Ta = 25°C, f = 1 kHz,
Preamplifier: R_g = 2.2 kΩ, R_L = 10 kΩ
Power amplifier: R_g = 600 Ω, R_L = 16 Ω, Vol. = max
Motor governor: I_m = 100 mA)

I_{CCQ}, I_{CC} – V_{CC}

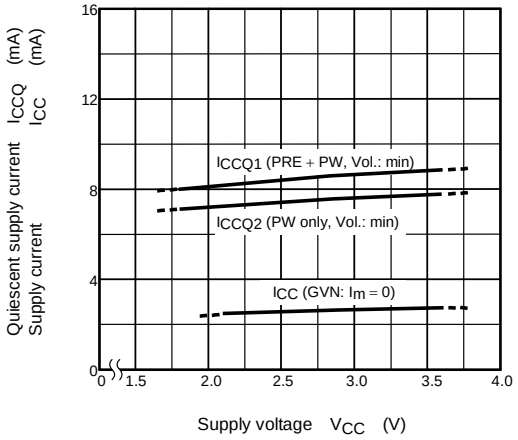

$V_{O\ (DC)}$ – V_{CC}

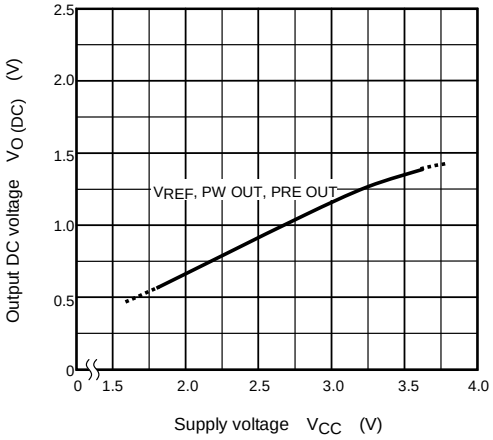

PRE G_{VO}, G_{VC} – f

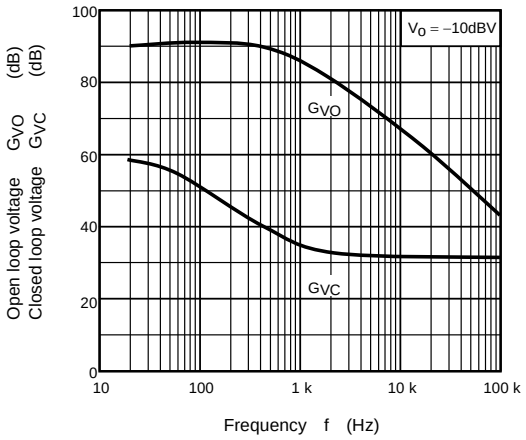

PRE CT – f

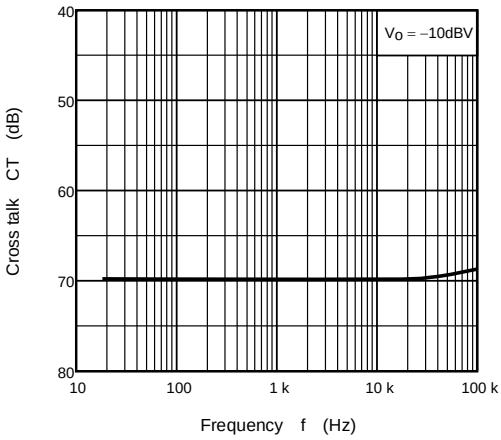

PRE V_{om} – V_{CC}

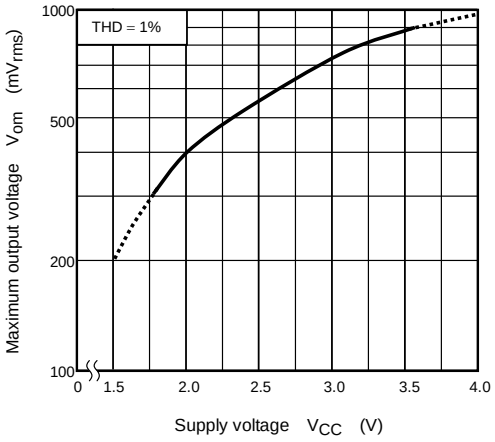

PRE THD – V_o

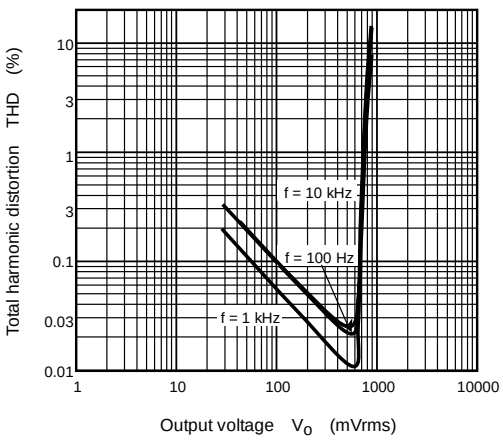

PRE $V_{ni} - V_{CC}$

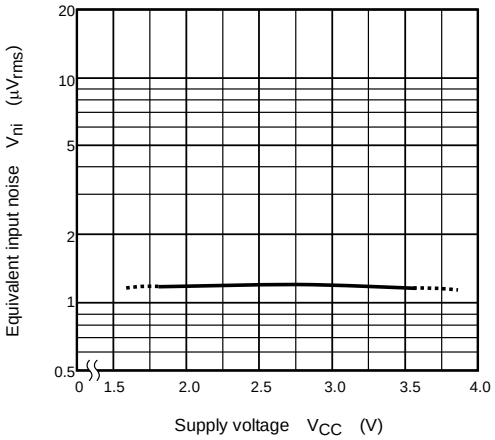

PRE $RR - V_{CC}$

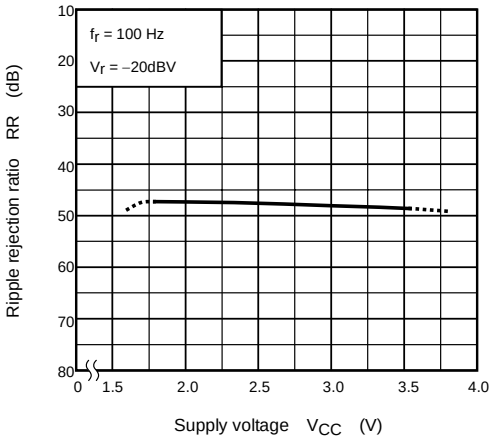

PW $G_V - f$

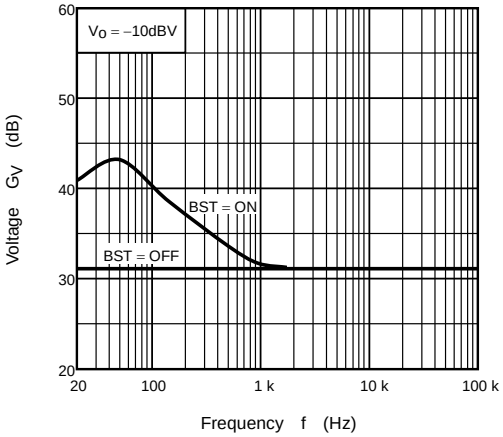

PW CT – f

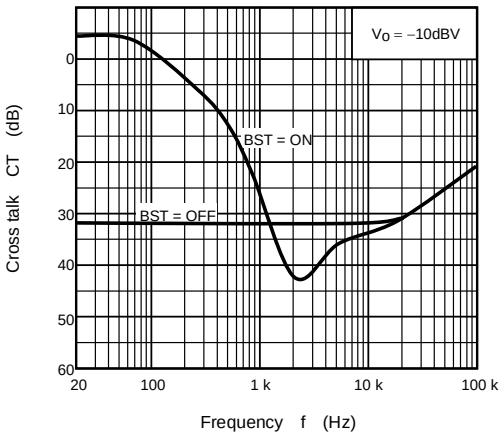

PW $P_o - V_{CC}$

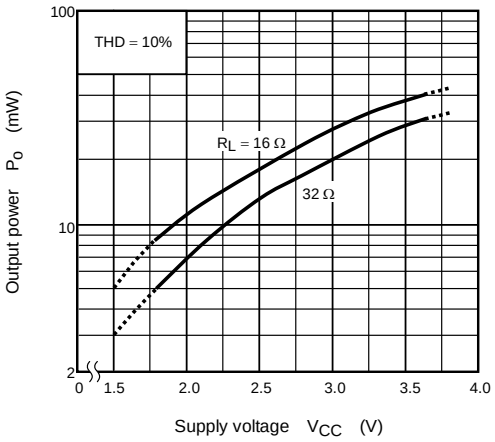

PW THD – P_o

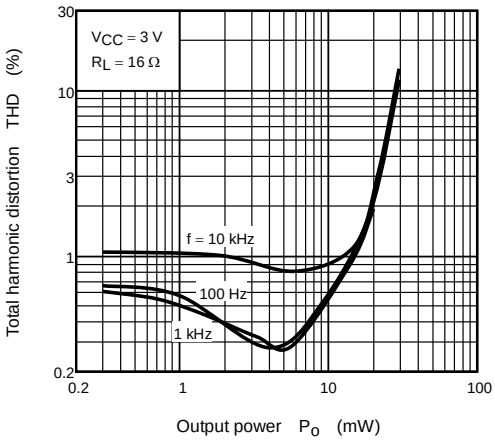

PW V_o – Vol.

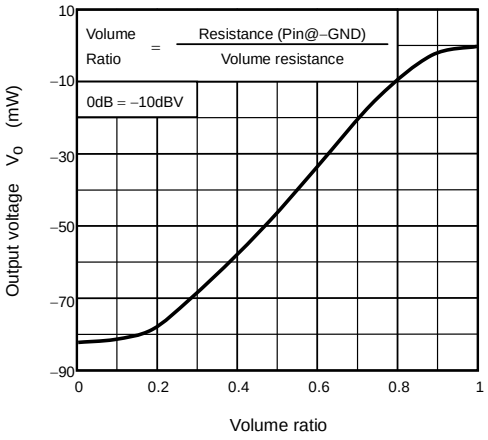

PW V_{no} – Vol.

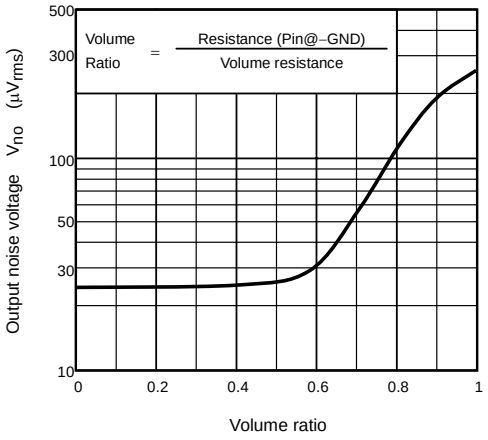

RR – Vol.

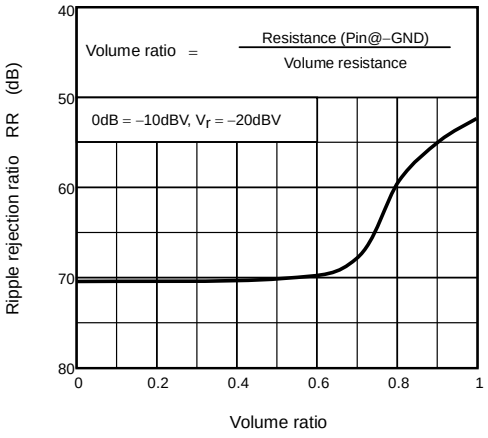

GVN ΔV_{REF}, ΔK – V_{CC}

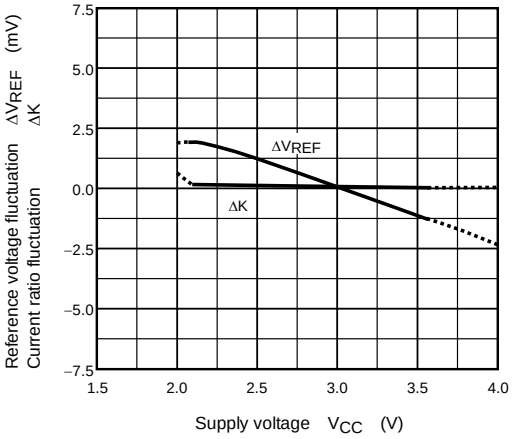

GVN ΔV_{REF}, ΔK – I_m

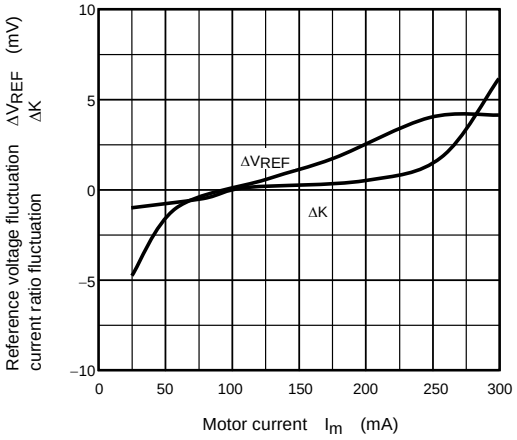

I_{CCQ}, I_{CC} – Ta

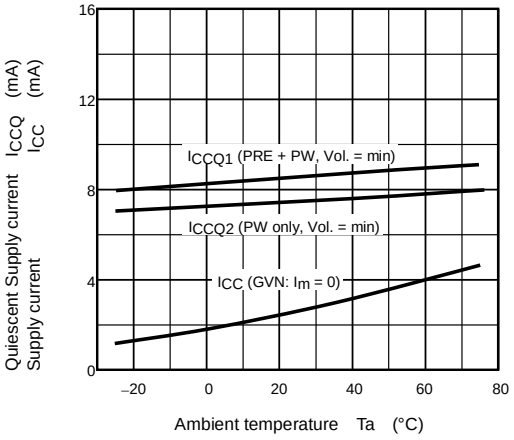

$V_{O\ (DC)}$ – Ta

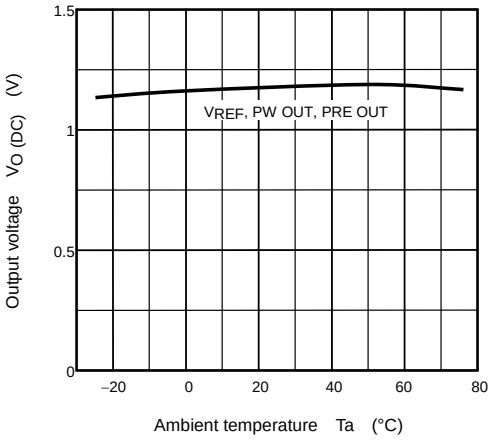

PRE G_V, V_{om} – Ta

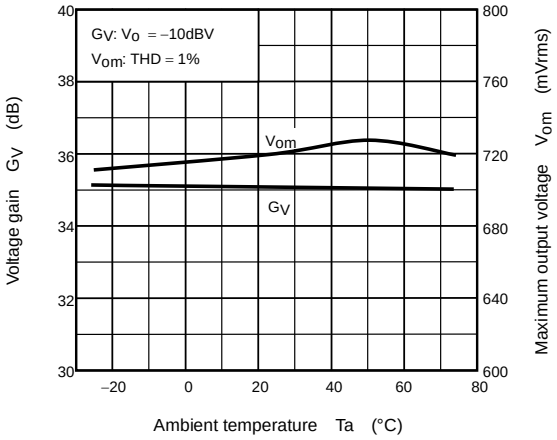

PRE THD – Ta

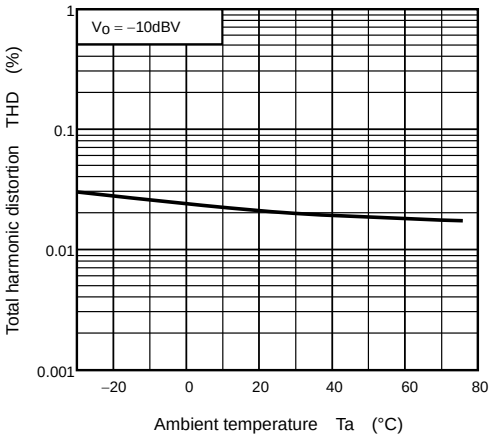

PW G_V, P_O – Ta

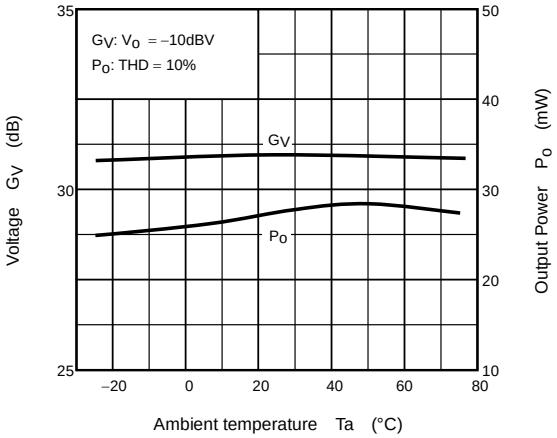

PW THD – Ta

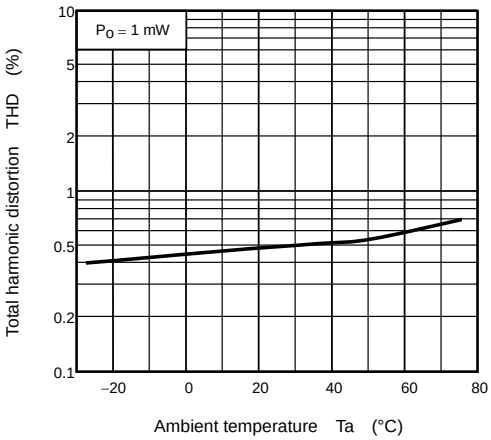

GVN ΔV_{REF}, ΔK – Ta

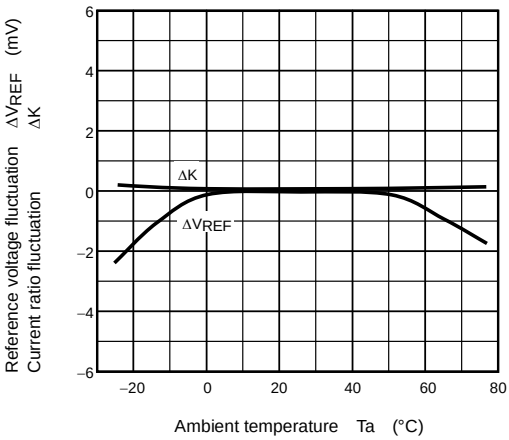

Application Circuit

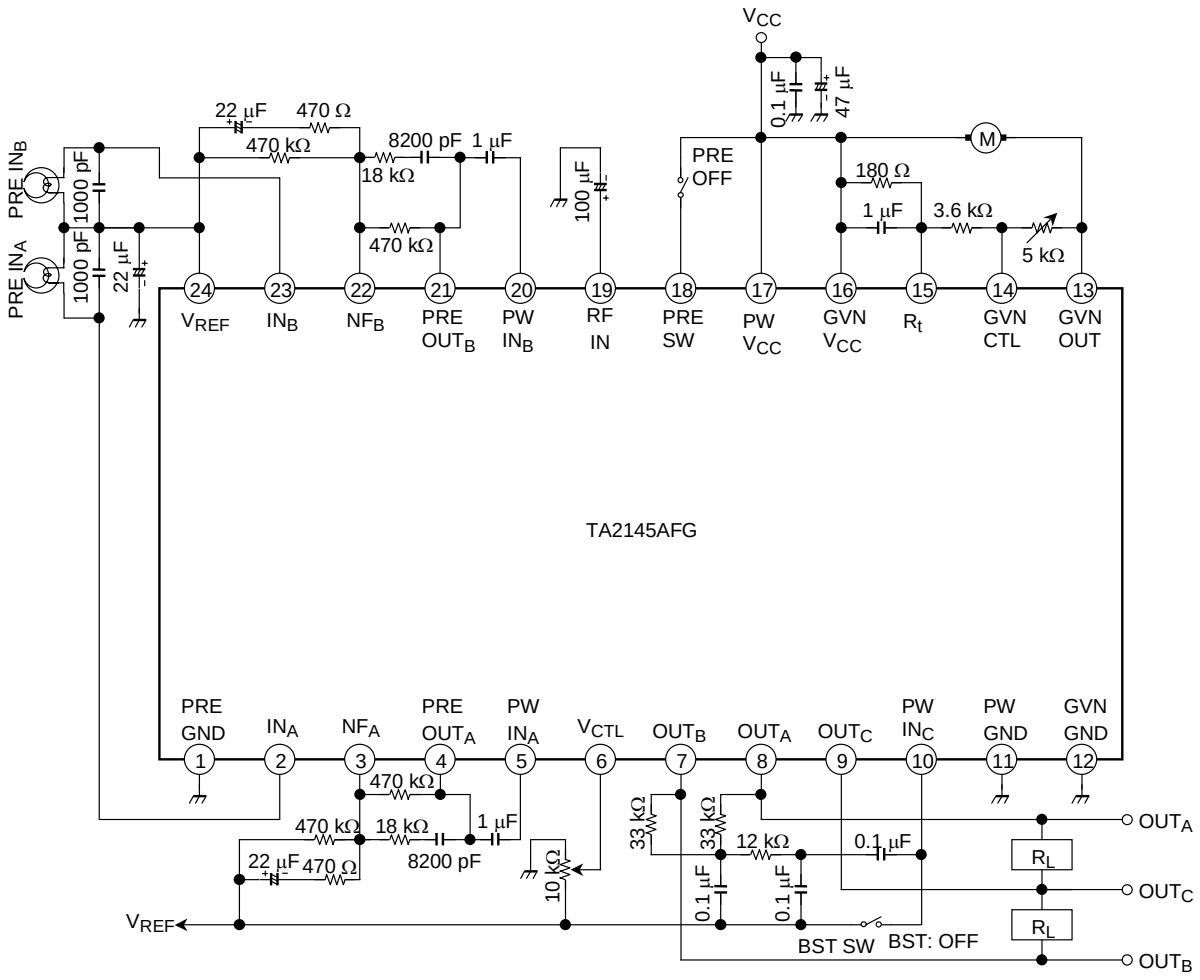

Package Dimensions

SSOP24-P-300-1.00 Unit : mm

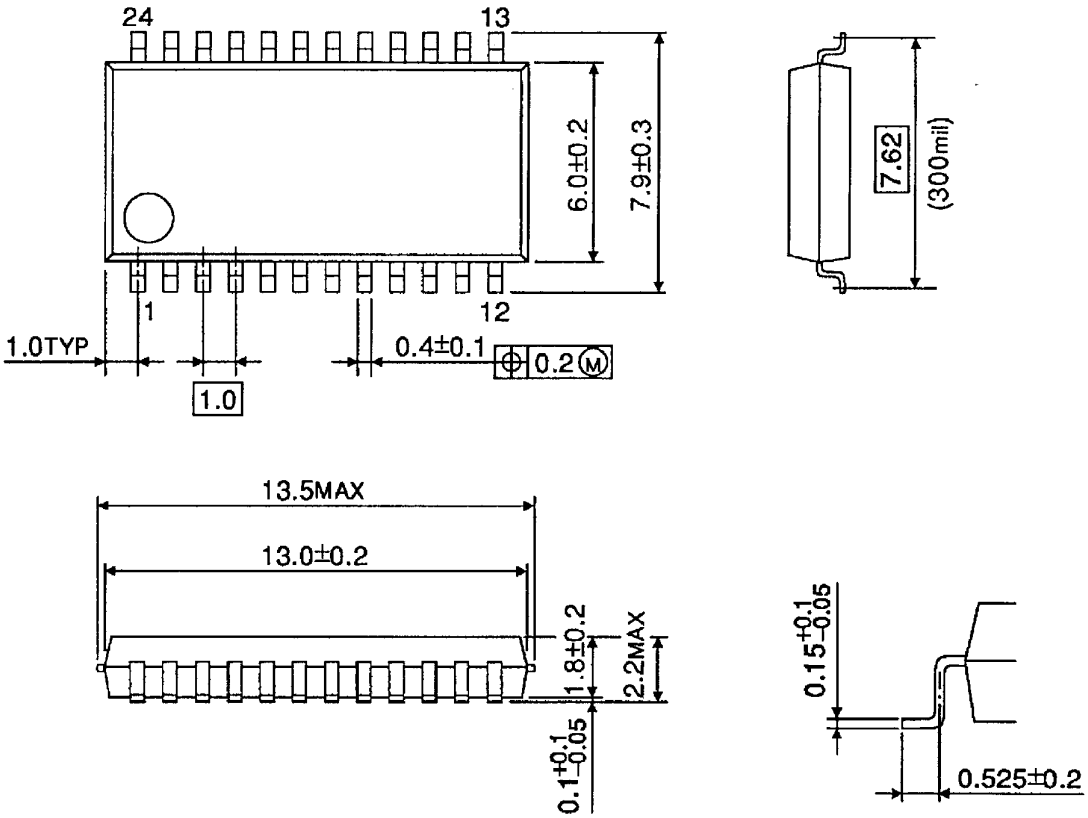

Weight: 0.32 g (typ.)

RESTRICTIONS ON PRODUCT USE

060116EBA

- The information contained herein is subject to change without notice. 021023_D
- TOSHIBA is continually working to improve the quality and reliability of its products. Nevertheless, semiconductor devices in general can malfunction or fail due to their inherent electrical sensitivity and vulnerability to physical stress. It is the responsibility of the buyer, when utilizing TOSHIBA products, to comply with the standards of safety in making a safe design for the entire system, and to avoid situations in which a malfunction or failure of such TOSHIBA products could cause loss of human life, bodily injury or damage to property.
  In developing your designs, please ensure that TOSHIBA products are used within specified operating ranges as set forth in the most recent TOSHIBA products specifications. Also, please keep in mind the precautions and conditions set forth in the “Handling Guide for Semiconductor Devices,” or “TOSHIBA Semiconductor Reliability Handbook” etc. 021023_A
- The TOSHIBA products listed in this document are intended for usage in general electronics applications (computer, personal equipment, office equipment, measuring equipment, industrial robotics, domestic appliances, etc.). These TOSHIBA products are neither intended nor warranted for usage in equipment that requires extraordinarily high quality and/or reliability or a malfunction or failure of which may cause loss of human life or bodily injury (“Unintended Usage”). Unintended Usage include atomic energy control instruments, airplane or spaceship instruments, transportation instruments, traffic signal instruments, combustion control instruments, medical instruments, all types of safety devices, etc. Unintended Usage of TOSHIBA products listed in this document shall be made at the customer’s own risk. 021023_B
- The products described in this document shall not be used or embedded to any downstream products of which manufacture, use and/or sale are prohibited under any applicable laws and regulations. 060106_Q
- The information contained herein is presented only as a guide for the applications of our products. No responsibility is assumed by TOSHIBA for any infringements of patents or other rights of the third parties which may result from its use. No license is granted by implication or otherwise under any patent or patent rights of TOSHIBA or others. 021023_C
- The products described in this document are subject to the foreign exchange and foreign trade laws. 021023_E

About solderability, following conditions were confirmed

- Solderability

  (1) Use of Sn-37Pb solder Bath
  - solder bath temperature = 230°C
  - dipping time = 5 seconds
  - the number of times = once
  - use of R-type flux

  (2) Use of Sn-3.0Ag-0.5Cu solder Bath
  - solder bath temperature = 245°C
  - dipping time = 5 seconds
  - the number of times = once
  - use of R-type flux