X20(c)DIF371

1 General Information

The module is equipped with 16 inputs for 1-wire connections. The module is designed for sink input wiring.

- 16 digital inputs
- Sink connection
- 1-wire connections
- Software input filter can be configured for entire module

2 Coated modules

Coated modules are X20 modules with a protective coating for the electronics component. This coating protects X20c modules from condensation and corrosive gases.
The modules' electronics are fully compatible with the corresponding X20 modules.

> **For simplification purposes, only images and module IDs of uncoated modules are used in this data sheet.**

The coating has been certified according to the following standards:

- Condensation: BMW GS 95011-4, 2x 1 cycle
- Corrosive gas: EN 60068-2-60, method 4, exposure 21 days

3 Order data

Order number	Short description	Figure
	Digital inputs	
X20DIF371	X20 digital input module, 16 inputs, 24 VDC, sink, configurable input filter, 1-wire connections	
X20cDIF371	X20 digital input module, coated, 16 inputs, 24 VDC, sink, configurable input filter, 1-wire connections	
	Required accessories	
	Bus modules	
X20BM11	X20 bus module, 24 VDC keyed, internal I/O supply continuous	
X20BM15	X20 bus module, with node number switch, 24 VDC keyed, internal I/O power supply connected through	
X20cBM11	X20 bus module, coated, 24 VDC keyed, internal I/O supply continuous	
	Terminal blocks	
X20TB1F	X20 terminal block, 16-pin, 24 VDC keyed	

Table 1: X20DIF371, X20cDIF371 - Order data

4 Technical data

Order number	X20DIF371	X20cDIF371
Short description		
I/O module	16 digital inputs 24 VDC for 1-wire connections	
General information		
B&R ID code	0xC0E8	0xDD44
Status indicators	I/O function per channel, operating state, module status	
Diagnostics		
Module run/error	Yes, using LED status indicator and software	
Power consumption		
Bus	0.18 W	
Internal I/O	1.47 W [1]	
Additional power dissipation caused by actuators (resistive) [W]	-	
Certifications		
CE	Yes	
ATEX	Zone 2, II 3G Ex nA nC IIA T5 Gc IP20, Ta (see X20 user's manual) FTZÚ 09 ATEX 0083X	
UL	cULus E115267 Industrial control equipment	
HazLoc	cCSAus 244665 Process control equipment for hazardous locations Class I, Division 2, Groups ABCD, T5	
DNV GL	Temperature: **B** (0 - 55°C) Humidity: **B** (up to 100%) Vibration: **B** (4 g) EMC: **B** (bridge and open deck)	
LR	ENV1	
KR	Yes	
ABS	Yes	
EAC	Yes	
KC	Yes	-
Digital inputs		
Nominal voltage	24 VDC	
Input characteristics per EN 61131-2	Type 1	
Input voltage	24 VDC -15% / +20%	
Input current at 24 VDC	Typ. 2.68 mA	
Input circuit	Sink	
Input filter		
Hardware	≤100 µs	
Software	Default 1 ms, configurable between 0 and 25 ms in 0.2 ms increments	
Connection type	1-wire connections	
Input resistance	Typ. 8.9 kΩ	
Simultaneity [2]		
With 24 V I/O power supply	100% (16 channels) [3]	
With 28.8 V I/O power supply	75% (12 channels) [3]	
Switching threshold		
Low	<5 VDC	
High	>15 VDC	
Insulation voltage between channel and bus	500 V_{eff}	
Electrical properties		
Electrical isolation	Channel isolated from bus Channel not isolated from channel	
Operating conditions		
Mounting orientation		
Horizontal	Yes	
Vertical	Yes	
Installation elevation above sea level		
0 to 2000 m	No limitation	
>2000 m	Reduction of ambient temperature by 0.5°C per 100 m	
Degree of protection per EN 60529	IP20	
Ambient conditions		
Temperature		
Operation		
Horizontal mounting orientation	-25 to 60°C	
Vertical mounting orientation	-25 to 50°C	
Derating	See section "Derating".	
Storage	-40 to 85°C	
Transport	-40 to 85°C	

Table 2: X20DIF371, X20cDIF371 - Technical data

Order number	X20DIF371	X20cDIF371
Relative humidity		
Operation	5 to 95%, non-condensing	Up to 100%, condensing
Storage	5 to 95%, non-condensing	
Transport	5 to 95%, non-condensing	
Mechanical properties		
Note	Order 1x terminal block X20TB1F separately. Order 1x bus module X20BM11 separately.	Order 1x terminal block X20TB1F separately. Order 1x bus module X20cBM11 separately.
Pitch	$12.5^{+0.2}$ mm	

Table 2: X20DIF371, X20cDIF371 - Technical data

1) The power consumed externally for operating the module discharges via the GND contact of the power supply module and must therefore be taken into account in the power balance of the power supply module.
2) Maximum permissible number of simultaneously enabled inputs
3) Derating must be taken into account.

5 Status LEDs

For a description of the various operating modes, see section "Additional information - Diagnostic LEDs" in the X20 system user's manual.

Image	LED	Color	Status	Description
	S	Green	Off	No power to module
			Single flash	RESET mode
			Blinking	PREOPERATIONAL mode
			On	RUN mode
		Red	Off	Module supply not connected or everything OK
		Red on / Green single flash		Invalid firmware
	1 - 16	Green		Input status of the corresponding digital input

6 Pinout

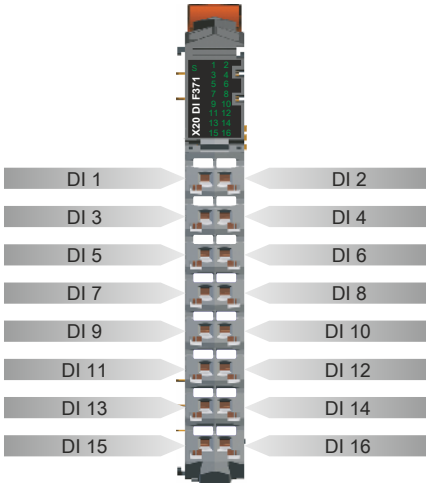

7 Connection example

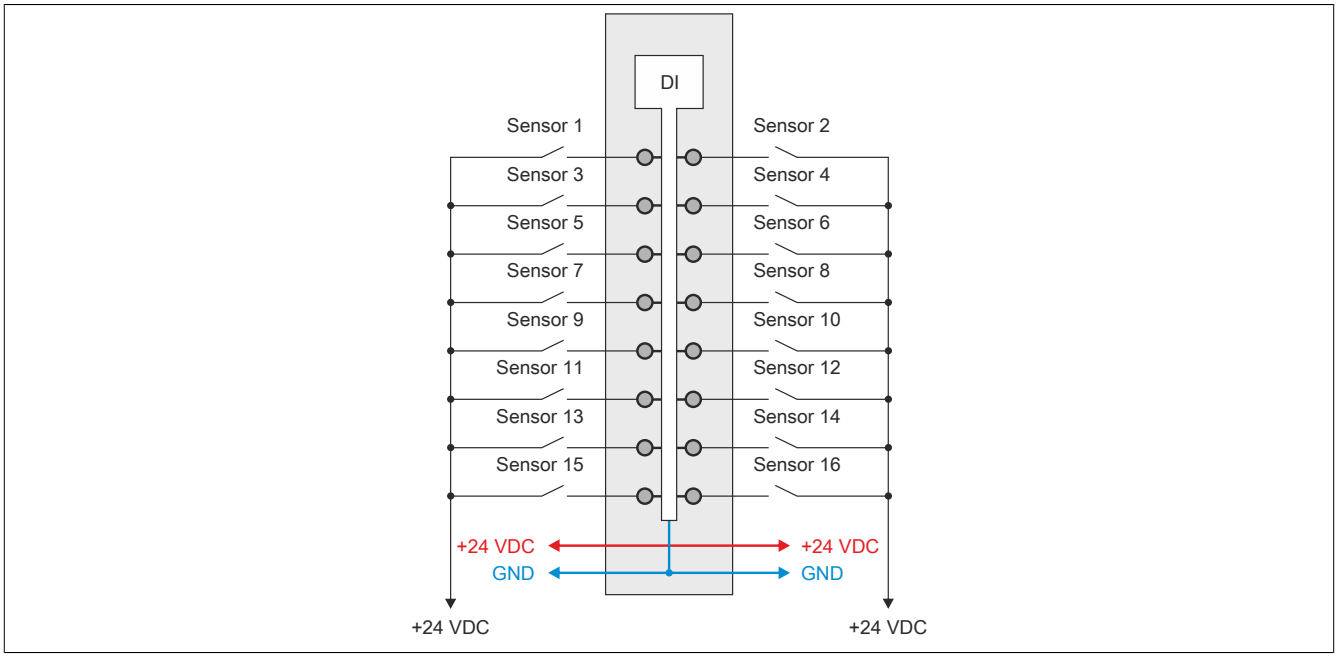

8 Input circuit diagram

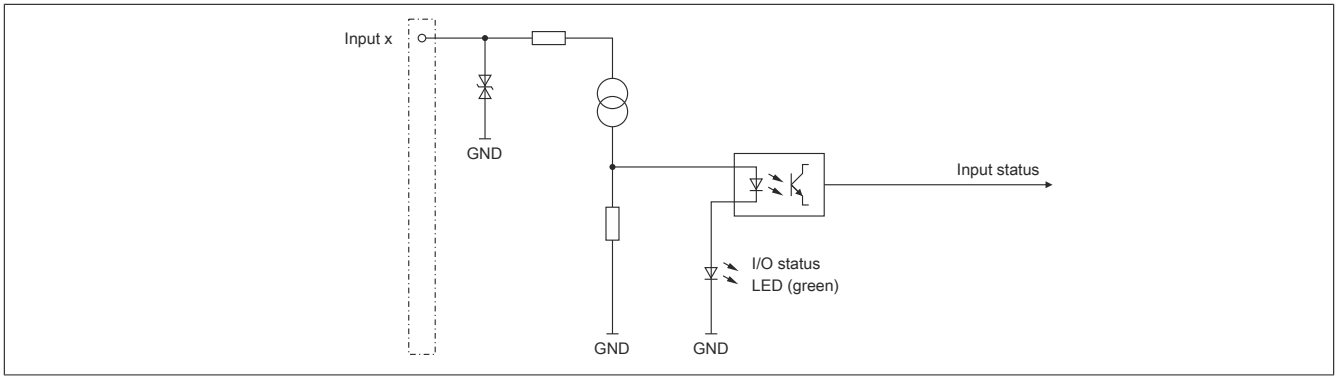

9 Input filter

An input filter is available for each input. The input delay can be set using register "ConfigOutput01" on page 7. Disturbance pulses which are shorter than the input delay are suppressed by the input filter.

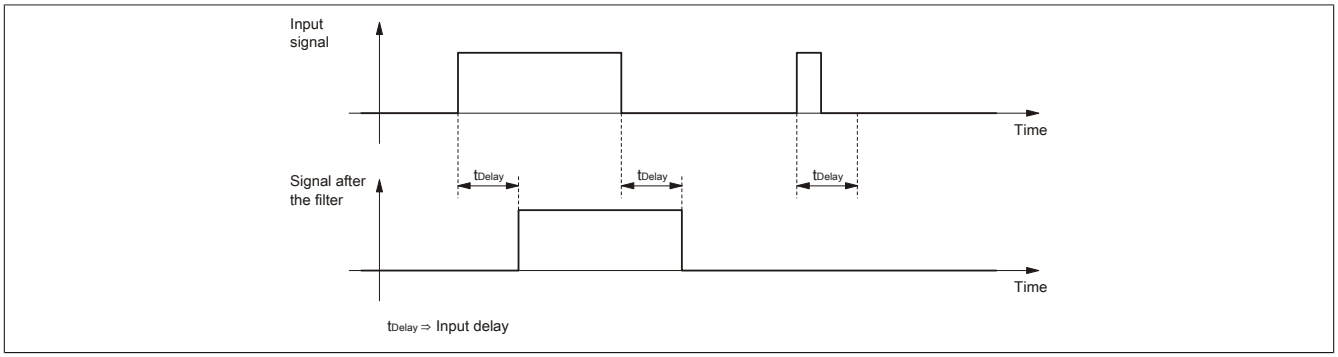

10 Derating

Be aware of the derating values below for the simultaneity factor.

Derating of simultaneity factor at 24 VDC input voltage

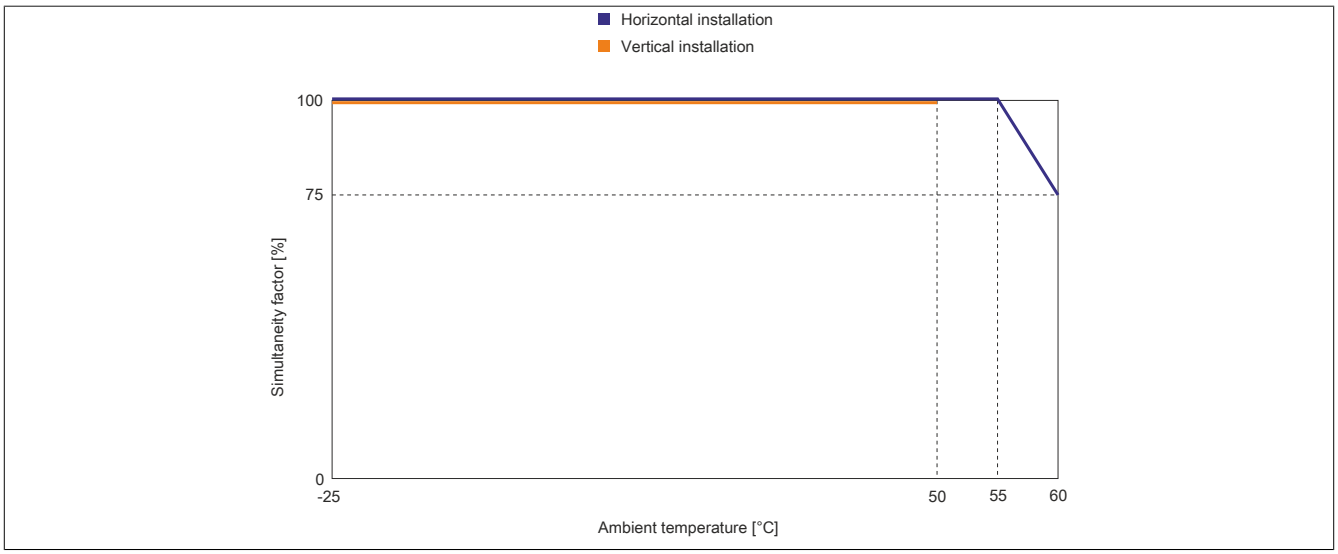

Derating of simultaneity factor at 28.8 VDC input voltage

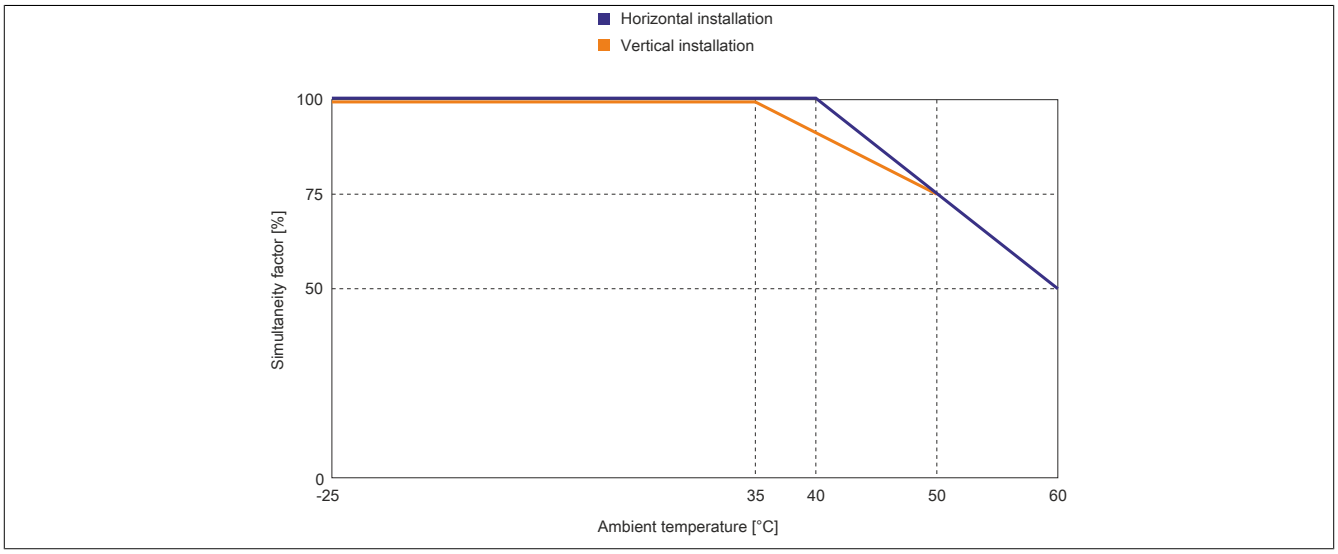

11 Register description

11.1 General data points

In addition to the registers described in the register description, the module has additional general data points. These are not module-specific but contain general information such as serial number and hardware variant.

General data points are described in section "Additional information - General data points" in the X20 system user's manual.

11.2 Function model 0 - Standard

Register	Fixed offset	Name	Data type	Read		Write	
				Cyclic	Acyclic	Cyclic	Acyclic
Configuration							
18	-	ConfigOutput01 (input filter)	USINT				•
Communication							
-	1	DigitalInput	UINT	•			
0	1	Input status of digital inputs 1 to 8	USINT				
		DigitalInput01	Bit 0				
		...	...				
		DigitalInput08	Bit 7				
1	2	Input status of digital inputs 9 to 16	USINT	•			
		DigitalInput09	Bit 0				
		...	...				
		DigitalInput16	Bit 7				

Fixed modules require their data points to be in a specific order in the X2X frame. Cyclic access occurs according to a predefined offset, not based on the register address.

Acyclic access continues to be based on the register numbers.

11.3 Function model 254 - Bus Controller

Register	Offset[1)]	Name	Data type	Read		Write	
				Cyclic	Acyclic	Cyclic	Acyclic
Configuration							
18	-	ConfigOutput01 (input filter)	USINT				•
Communication							
0	0	Input status of digital inputs 1 to 8	USINT	•			
		DigitalInput01	Bit 0				
		...	...				
		DigitalInput08	Bit 7				
1	1	Input status of digital inputs 9 to 16	USINT	•			
		DigitalInput09	Bit 0				
		...	...				
		DigitalInput16	Bit 7				

1) The offset specifies where the register is within the CAN object.

11.3.1 Using the module on the bus controller

Function model 254 "Bus controller" is used by default only by non-configurable bus controllers. All other bus controllers can use other registers and functions depending on the fieldbus used.

For detailed information, see section "Additional information - Using I/O modules on the bus controller" in the X20 user's manual (version 3.50 or later).

11.3.2 CAN I/O bus controller

The module occupies 2 digital logical slots on CAN I/O.

11.4 Digital inputs

Unfiltered

The input state is collected with a fixed offset to the network cycle and transferred in the same cycle.

Filtered

The filtered status is collected with a fixed offset to the network cycle and transferred in the same cycle. Filtering takes place asynchronously to the network in multiples of 200 µs with a network-related jitter of up to 50 µs.

11.4.1 Digital input filter

Name:
ConfigOutput01

This register can be used to specify the filter value for all digital inputs.

The filter value can be configured in steps of 100 µs. It makes sense to enter values in steps of 2, however, since the input signals are sampled every 200 µs.

Data type	Value	Filter
USINT	0	No software filter (bus controller default setting)
	2	0.2 ms
	...	...
	250	25 ms - Higher values are limited to this value

11.4.2 Input state of digital inputs 1 to 16

Name:
DigitalInput or
DigitalInput01 to DigitalInput16

This register contains the input state of digital inputs 1 to 8 and 9 to 16.

Only function model 0 - Standard:

Setting "Packed inputs" in the Automation Studio I/O configuration can be used to determine whether all bits of this register should be applied individually as data points in the Automation Studio I/O mapping ("DigitalInput01" to "DigitalInput16") or whether this register should be displayed as a single UINT data point ("DigitalInput").

Data type	Values	Information
UINT	0 to 65535	Packed inputs = On
USINT	See the bit structure.	Packed inputs = Off or function model ≠ 0 - Standard

Bit structure:

Register 0:

Bit	Name	Value	Information
0	DigitalInput01	0 or 1	Input state - Digital input 1
...		...	
7	DigitalInput08	0 or 1	Input state - Digital input 8

Register 1:

Bit	Name	Value	Information
0	DigitalInput09	0 or 1	Input state - Digital input 9
...		...	
7	DigitalInput16	0 or 1	Input state - Digital input 16

11.5 Minimum cycle time

The minimum cycle time specifies how far the bus cycle can be reduced without communication errors occurring. It is important to note that very fast cycles reduce the idle time available for handling monitoring, diagnostics and acyclic commands.

Minimum cycle time	
Without filtering	100 µs
With filtering	150 µs

11.6 Minimum I/O update time

The minimum I/O update time specifies how far the bus cycle can be reduced so that an I/O update is performed in each cycle.

Minimum I/O update time	
Without filtering	100 µs
With filtering	200 µs