THIS DRAWING IS UNPUBLISHED. RELEASED FOR PUBLICATION –,– .
© COPYRIGHT – BY TYCO ELECTRONICS CORPORATION. ALL INTERNATIONAL RIGHTS RESERVED.

LOC	DIST
AF	50

REVISIONS

P	LTR	DESCRIPTION	DATE	DWN	APVD
	AC1	REVISED PER ECR–08–017312	16JUL08	HMR	PD

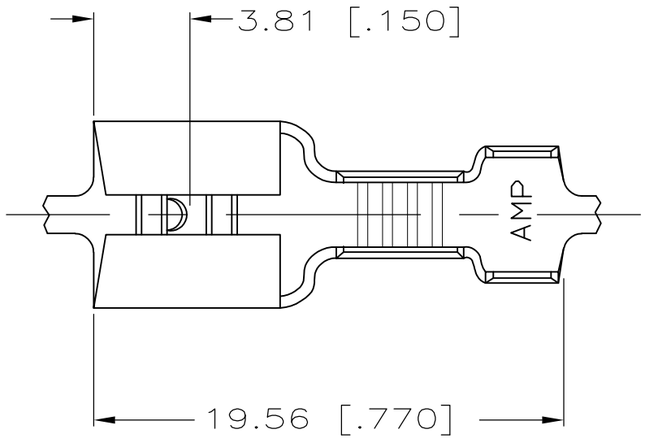

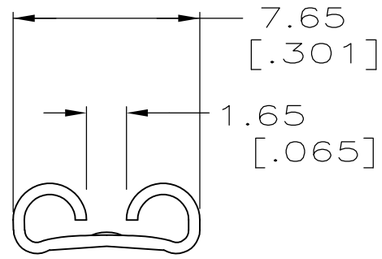

VIEW A–A

1. DIM'S IN BRACKETS ARE IN INCHES.
2. CONTINUOUS STRIP ON REELS.
3. FOREIGN PRODUCTION ONLY.
4. MATING TAB THK IS 0.81±0.025[.032±.001].
5. WIRE SIZE IS [#14–#10] AWG.
6. INSULATION DIA IS 3.81–5.08 [.150–.200].
7. REVERSE REELING W/ PAPER INTERLEAVING
8. PRELIMINARY – NOT FOR PRODUCTION
9. FOR AMP ITALY ONLY, NOT STRESS RELIEVED.

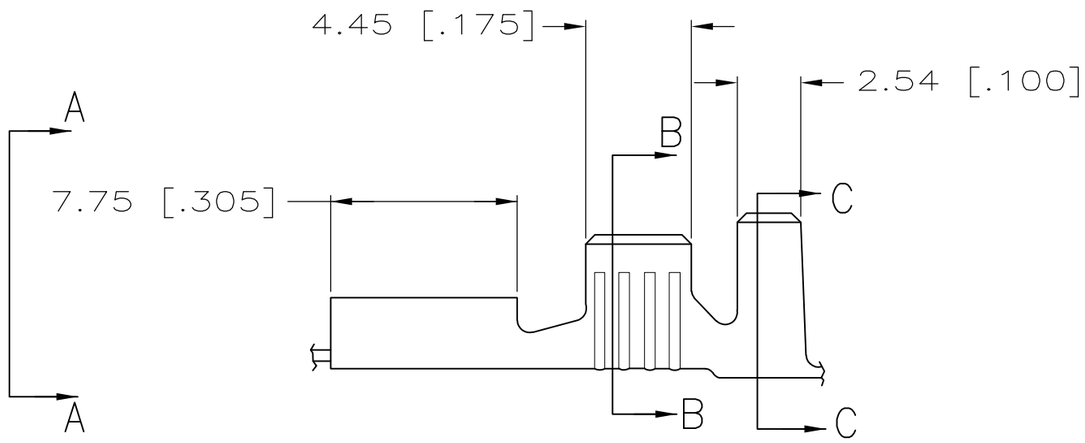

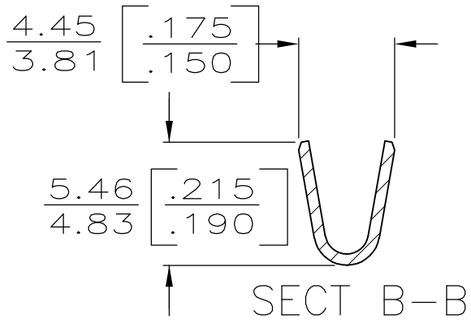

SECT B–B

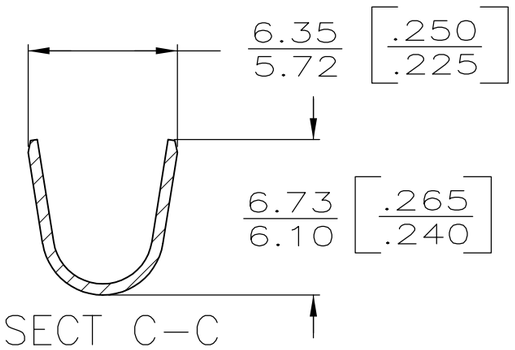

SECT C–C

MATERIAL	PART NO
0.46 [.018] BRASS	9 1–41450–1
0.46 [.018] BRASS	7 8 41450–3
0.46 [.018] PHOS BRZ	3 41450–2
0.46 [.018] BRASS	3 41450–1
0.46 [.018] BRASS	41450

TYPE	WIDTH	STRIP LENGTH ±0.38 [±.015]	TYPE	WIDTH	HEIGHT ±.051[±.002]	WIRE
0	5.33 [.210]	5.59 [.220]	F	3.30 [.130]	2.90[.114]	5.0MM² [10]
					2.39[.094]	3.0MM² [12]
					2.08 [.082]	2.0MM² [14]
INSUL BARREL CRIMP		WIRE BARREL CRIMP				

THIS DRAWING IS A CONTROLLED DOCUMENT.

DIMENSIONS: INCHES

TOLERANCES UNLESS OTHERWISE SPECIFIED:

0 PLC	± –
1 PLC	± –
2 PLC	± 0.25 [.010]
3 PLC	± –
4 PLC	± –
ANGLES	± –

MATERIAL: SEE TABLE

FINISH: TIN PLATE

DWN	JR RUTH	2/7/86
CHK	G YETTER	2/7/86
APVD	R KUZO	2/7/86
PRODUCT SPEC	—	
APPLICATION SPEC	—	
WEIGHT	—	

Tyco Electronics

Tyco Electronics Corporation
Harrisburg, PA 17105–3608

NAME: RECEPTACLE, FASTON, .250 SERIES

SIZE	CAGE CODE	DRAWING NO	RESTRICTED TO
A3	00779	C–41450	—

CUSTOMER DRAWING | SCALE 4:1 | SHEET 1 OF 1 | REV AC1