CONNECTOR P/N	MA1-SFCR-005

DWG. NO. OL-MA1-SFCR-005

REVISIONS

ECO NO.	LTR	DESCRIPTION	DATE	RELEASED
	A	INITIAL RELEASE		

COMPONENT	MATERIAL	FINISH
HOUSING, RING, PLUG, AND CONTACT	BeCu PER ASTM B 196 AND/OR ASTM B 197 AND UNS #C17300 OR UNS #C172000	GOLD PLATE PER ASTM B 488, TYPE 1, GRADE C, .000050 TO .000100 THICK OVER NICKEL PER AMS QQ-N-290 OR AMS 2404 .000050 TO .000150 THICK.
INSULATOR(S)	PTFE(TEFLON) PER ASTM D 1710 AND ASTM D 1457	N/A

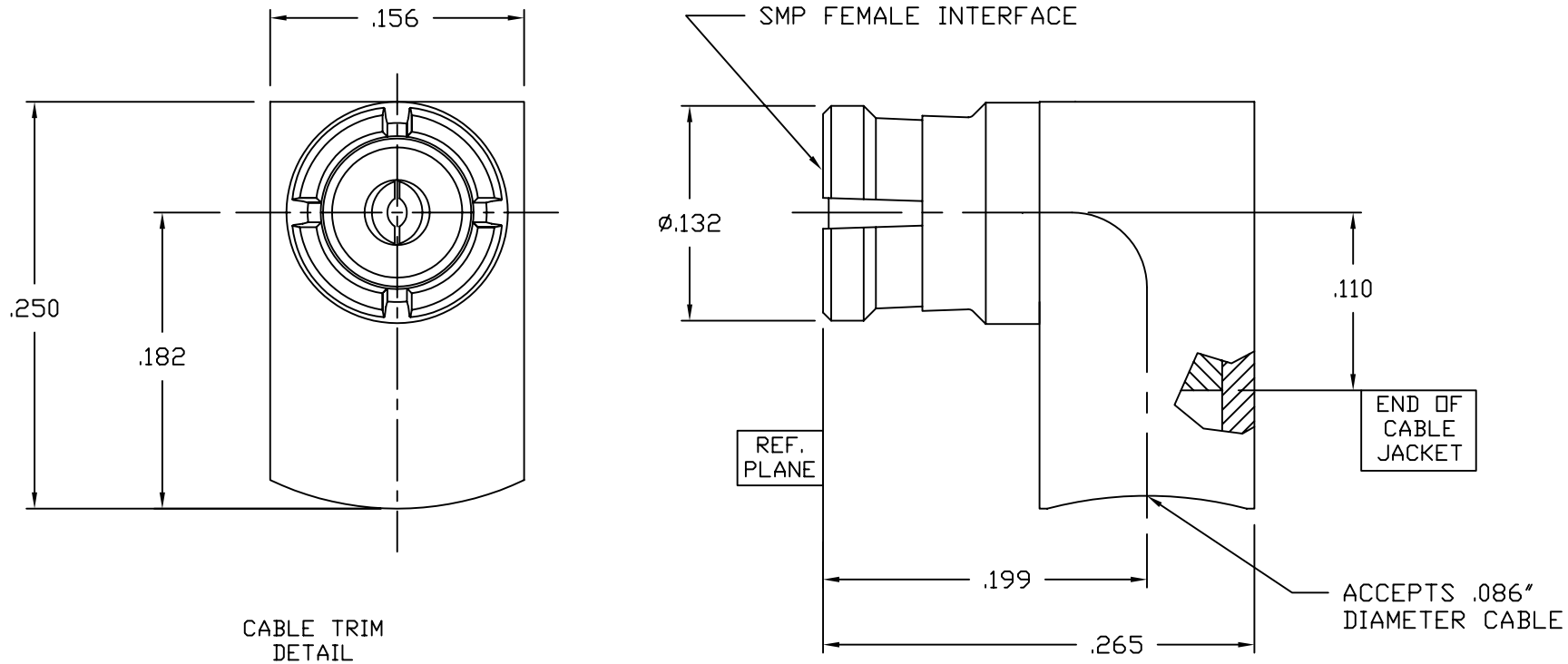

CABLE TRIM DETAIL

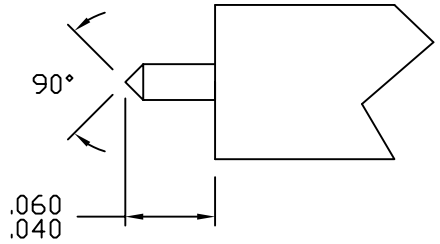

UNLESS OTHERWISE SPECIFIED: DIMENSIONS ARE IN INCHES
TOLERANCES ON:
DECIMALS .X ±.1 .XX ±.01 .XXX ±.005
ANGULAR ± 5°
FRACTIONS ± 1/32
DO NOT SCALE DRAWING

THIS DRAWING AND THE DATA DISCLOSED HEREIN IS CONFIDENTIAL AND PROPRIETARY AND IS NOT TO BE REPRODUCED, USED, OR DISCLOSED IN WHOLE OR IN PART TO ANYONE WITHOUT THE EXPRESSED WRITTEN PERMISSION OF CRISTEK INTERCONNECTS.

PRODUCT CODE: MSR1

		DATE
DRAWN	DME	5/20/02
CHECK	DME	5/20/02
APPROVED	DME	5/20/02

CAD FILENAME: CADFILENAME

THIRD ANGLE PROJECTION

CRISTEK Interconnects, Inc.
1301 S. LEWIS STREET
ANAHEIM, CA 92805
(714) 618-2000

TITLE: SMP FEMALE SWEPT R/A TO .086

SIZE: C | CAGE NO.: 67720 | DWG. NO.: OL-MA1-SFCR-005

SCALE: NONE | SHEET 1 OF 1

COMPUTER GENERATED, DO NOT REVISE MANUALLY.