Two-Piece Terminal Block Connectors

Right-Angle Open End Header w/Interlock, 3.5 mm Centerline Color – Green

UL Rating – 150 V, 10 A

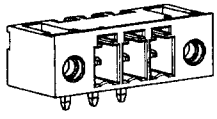

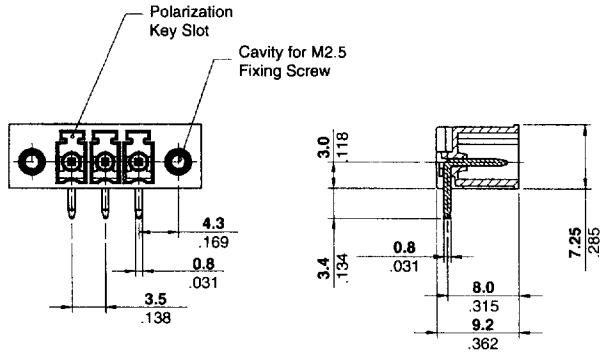

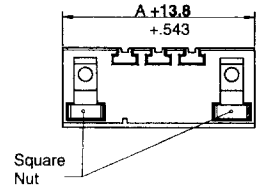

Recommended PC Board Layout

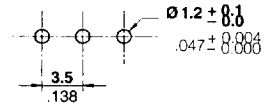

No. of Positions	Dim. A	Part Numbers
2	**3.5** [0.138]	284539-2
3	**7.0** [0.276]	284539-3
4	**10.5** [0.413]	284539-4
5	**14.0** [0.551]	284539-5
6	**17.5** [0.689]	284539-6
7	**21.0** [0.827]	284539-7
8	**24.5** [0.965]	284539-8
9	**28.0** [1.102]	284539-9
10	**31.5** [1.240]	1-284539-0
11	**35.0** [1.378]	1-284539-1
12	**38.5** [1.516]	1-284539-2

No. of Positions	Dim. A	Part Numbers
13	**42.0** [1.654]	1-284539-3
14	**45.5** [1.791]	1-284539-4
15	**49.0** [1.929]	1-284539-5
16	**52.5** [2.067]	1-284539-6
17	**56.0** [2.205]	1-284539-7
18	**59.5** [2.343]	1-284539-8
19	**63.0** [2.480]	1-284539-9
20	**66.5** [2.618]	2-284539-0
21	**70.0** [2.756]	2-284539-1
22	**73.5** [2.894]	2-284539-2
23	**77.0** [3.031]	2-284539-3

Right-Angle Closed End Header w/Threaded Flange, 3.81 mm Centerline Color – Green

UL Rating – 150 V, 10 A

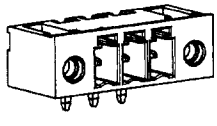

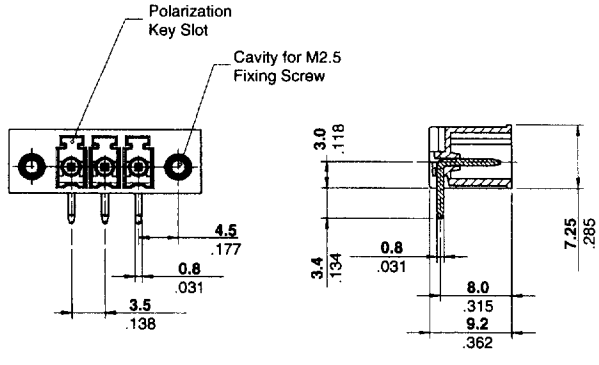

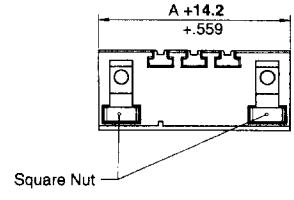

Recommended PC Board Layout

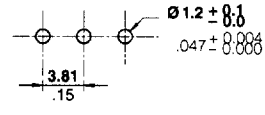

No. of Positions	Dim. A	Part Numbers
2	**3.81** [0.150]	284541-2
3	**7.62** [0.300]	284541-3
4	**11.43** [0.450]	284541-4
5	**15.24** [0.600]	284541-5
6	**19.05** [0.750]	284541-6
7	**22.86** [0.900]	284541-7
8	**26.67** [1.050]	284541-8
9	**30.48** [1.200]	284541-9
10	**34.29** [1.350]	1-284541-0
11	**38.10** [1.500]	1-284541-1
12	**41.91** [1.650]	1-284541-2

No. of Positions	Dim. A	Part Numbers
13	**45.72** [1.800]	1-284541-3
14	**49.53** [1.950]	1-284541-4
15	**53.34** [2.100]	1-284541-5
16	**57.15** [2.250]	1-284541-6
17	**60.96** [2.400]	1-284541-7
18	**64.77** [2.550]	1-284541-8
19	**68.58** [2.700]	1-284541-9
20	**72.39** [2.850]	2-284541-0
21	**76.20** [3.000]	2-284541-1
22	**80.01** [3.150]	2-284541-2
23	**83.82** [3.300]	2-284541-3

For complete product information, order Catalog 1308389

Products for Industrial & Commercial Applications

Dimensions are shown for reference purposes only.

Dimensions are in inches and millimeters unless otherwise specified. Values in brackets are metric equivalents.

Specifications subject to change.

Technical Support Center
1-800-522-6752
www.tycoelectronics.com