Micro Commercial Components

Micro Commercial Components
20736 Marilla Street Chatsworth
CA 91311
Phone: (818) 701-4933
Fax: (818) 701-4939

2SA1015

PNP Silicon Plastic-Encapsulate Transistor

Features

- Capable of 0.4Watts of Power Dissipation.
- Collector-current 0.15A
- Collector-base Voltage 50V
- Operating and storage junction temperature range: -55°C to +150°C
- Case Material: Molded Plastic. UL Flammability Classification Rating 94V-0
- Marking:A1015

TO-92

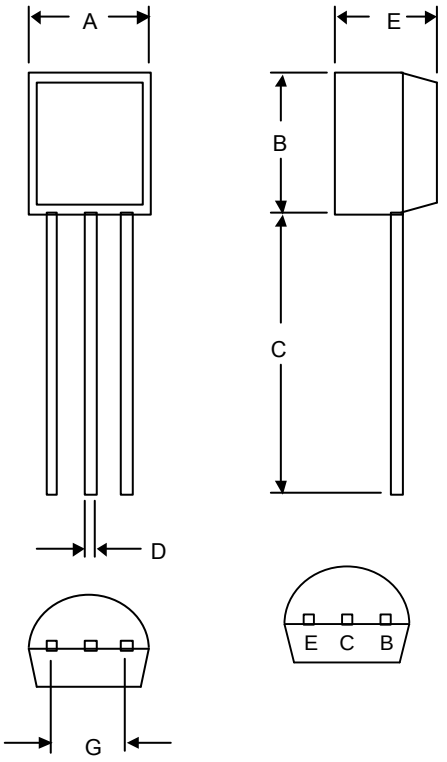

DIMENSIONS					
	INCHES		MM		
DIM	MIN	MAX	MIN	MAX	NOTE
A	.170	.190	4.33	4.83	
B	.170	.190	4.30	4.83	
C	.550	.590	13.97	14.97	
D	.010	.020	0.36	0.56	
E	.130	.160	3.30	3.96	
G	.010	.104	2.44	2.64	

Electrical Characteristics @ 25°C Unless Otherwise Specified

Symbol	Parameter	Min	Max	Units
OFF CHARACTERISTICS				
$V_{(BR)CEO}$	Collector-Emitter Breakdown Voltage (I_C=0.1mAdc, I_B=0)	50	---	Vdc
$V_{(BR)CBO}$	Collector-Base Breakdown Voltage (I_C=100uAdc, I_E=0)	50	---	Vdc
I_{CBO}	Collector Cutoff Current (V_{CB}=50Vdc, I_E=0)	---	0.1	uAdc
I_{EBO}	Emitter Cutoff Current (V_{EB}=5.0Vdc, I_C=0)	---	0.1	uAdc
ON CHARACTERISTICS				
h_{FE}	DC Current Gain (I_C=2.0mAdc, V_{CE}=6.0Vdc)	70	400	---
$V_{CE(sat)}$	Collector-Emitter Saturation Voltage (I_C=100mAdc, I_B=10mAdc)	---	0.3	Vdc
$V_{BE(sat)}$	Base-Emitter Saturation Voltage (I_C=100mAdc, I_B=10mAdc)	---	1.1	Vdc
V_{BE}	Base-Emitter Voltage (I_E=310mAdc)	---	1.45	Vdc
SMALL-SIGNAL CHARACTERISTICS				
f_T	Transistor Frequency (I_C=1.0mAdc, V_{CE}=10Vdc, f=30MHz)	80	---	MHz

CLASSIFICATION OF $H_{FE(1)}$

Rank	O	Y	GR
Range	70-140	120-240	200-400

Micro Commercial Components

IMPORTANT NOTICE
Micro Commercial Components Corp. reserves the right to make changes without further notice to any product herein to make corrections, modifications , enhancements , improvements , or other changes . ***Micro Commercial Components Corp***. does not assume any liability arising out of the application or use of any product described herein; neither does it convey any license under its patent rights ,nor the rights of others . The user of products in such applications shall assume all risks of such use and will agree to hold ***Micro Commercial Components Corp***. and all the companies whose products are represented on our website, harmless against all damages.
APPLICATIONS DISCLAIMER
Products offer by ***Micro Commercial Components Corp***. are not intended for use in Medical, Aerospace or Military Applications.