THIS DRAWING AND DESIGN HEREON CONSTITUTES A PROPRIETARY DESIGN OF PACKARD ELECTRIC DIVISION AND IS NOT TO BE DUPLICATED OR REPRODUCED WITHOUT AUTHORITY OF PACKARD ELECTRIC DIVISION

DO NOT SCALE

PART NO 1212 4523

DATE	SYM	REVISION RECORD	AUTH	DR	CK
18MY92	A	RELEASED	920005	TLM	TLM
25FE93	B	.267±.015 WAS			
		.230±.015	153970	TMP	TMP
20SE93	—	REVISED DIM	157184	JET	JET

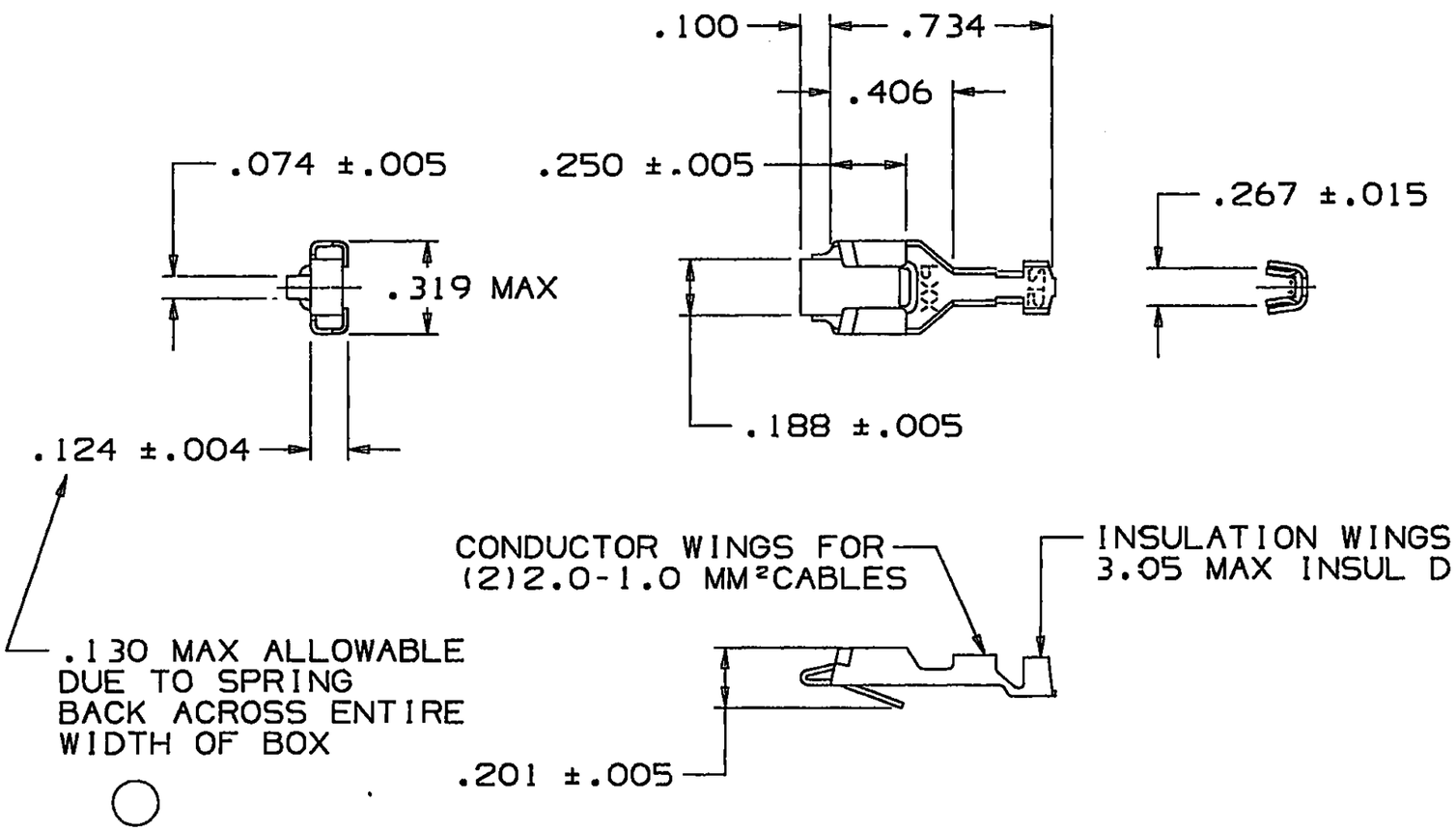

NOTE — 1. TO FIT .032 X .250 BLADE.

PACKARD ELECTRIC DIVISION
GENERAL MOTORS CORPORATION
WARREN, OHIO

Unigraphics II

THIRD ANGLE PROJECTION

ENGLISH
DIMENSIONS ARE IN INCHES UNLESS OTHERWISE SPECIFIED

TOLERANCE UNLESS OTHERWISE SPECIFIED
DECIMAL: ANGULAR ± 2°
TWO PLACE ±
THREE PLACE ± .010

CODE NO 6900	QC	DES	
DWG DATE 18MY92		DR TOM MUDREY	18MY92
SCALE NONE		CK TOM MUDREY	26MY92
REFERENCE NO SHEET #1 12124500 "AO" SIZE		APPR M. LAGALY	29MY92
		VOL CM³	

MATERIAL SPEC .0180 THK SAE CA260 BRASS - TIN PLATED

NAME TERM F 56 SER STRGHT

PART NUMBER 1212 4523 OUTLINE DRAWING

SIZE A3