SINGLE HETEROJUNCTION LASER DIODE ARRAYS

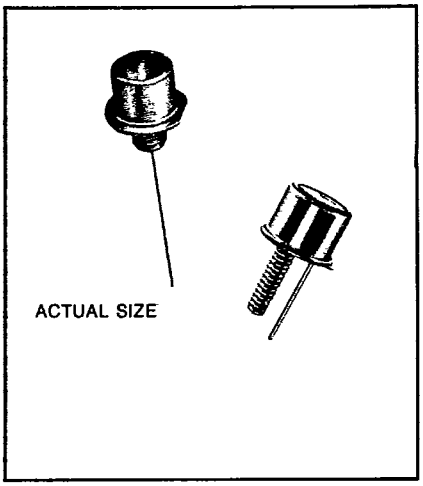

FEATURES

- High Efficiency at Low Drive Currents
- Up to 400 Watts Peak Power Output
- Operation to 70° C for Selected Devices
- Hermetic T0-5 Packages
- Custom Arrays Available
- 904 nanometer Peak Wavelength at 25° C
- Reverse Polarity Devices Available

DESCRIPTION

The LD-200 Series devices are single heterostructure Gallium Arsenide injection laser diode arrays designed for high peak power pulsed operation. These multichip linear arrays offer peak powers up to 400 watts. Units may be selected to operate to 70° C. The standard housing for these lasers is a hermetically sealed T0-5 style package. Applications for these devices include ceilometer, range finder and illuminators.

ELECTRO-OPTICAL CHARACTERISTICS OF THE DIODE AT 25°C

Parameters	Symbol	Min.	Typ.	Max.	Units
Wavelength of Peak Intensity	λ		904		nm
Spectral Width at 50% points	$\Delta\lambda$		8		nm
Rise Time of Radiant Flux-10% to 90% pts.	Tr		<1		ns
Pulse Width-50% pts. @I fm	Tp			200	ns
Storage Temperature	Ts	-196		+100	°C
Operating Temperature	Tc	-50		+60(70*)	°C

*Selected Units

TYPICAL CHARACTERISTICS

CHARACTERISTICS OF A PACKAGED DIODE @ 25°C

Type	Total Peak Radiant Flux at max. rated I fm (watts) Min.	Typ.	Typical emitting area (mils) Max.	Total number of diodes #	Typ. threshold curr. (amps) Ith	Max. peak forward curr. (amp.) Ifm	Typ. peak forward voltage (volts) @50mA Vf	@Ifm Vfm	Duty factor % Max.	Package
LD-214	60	85	156 x.08	12	10	40	15	65	0.02	LDL-5A
LD-214C	60	85	156 x.08	12	10	40	15	65	0.02	T0-5 Coaxial
LD-214S	60	85	45 x45	12	10	40	15	65	0.02	LDL-5E
LD-215	100	120	156 x.08	12	10	40	15	65	0.02	LDL-5A
LD-215C	100	120	156 x.08	12	10	40	15	65	0.02	T0-5 Coaxial
LD-215S	100	120	45 x45	12	10	40	15	65	0.02	LDL-5E
LD-220	200	240	156 x25	24	10	40	30	130	0.02	LDL-5C
LD-224-8S	150	170	45 x45	8	20	75	10	55	0.02	LDL-5E
LD-230*	300	375	70 x65	40	10	40	50	240	0.02	LDL-5B
LD-235	350	400	156 x65	48	10	40	60	280	0.02	LDL-5B

*Formerly LD-430

PACKAGE DRAWING

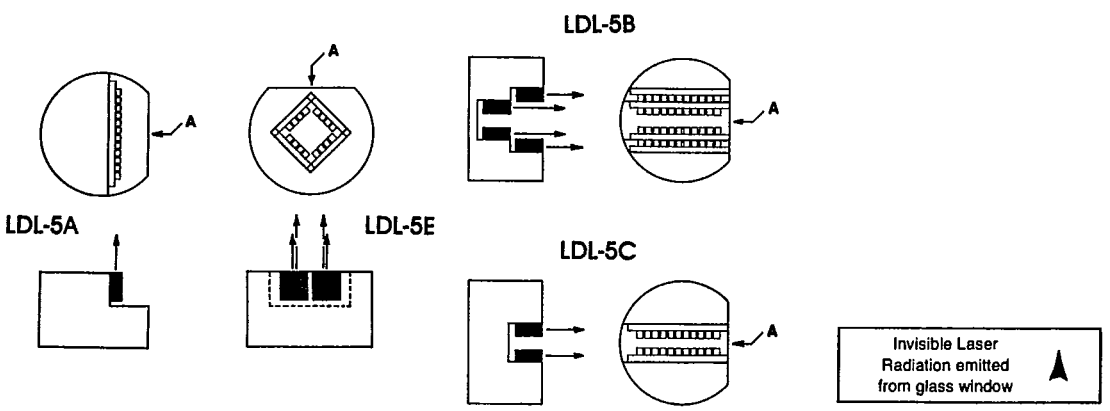

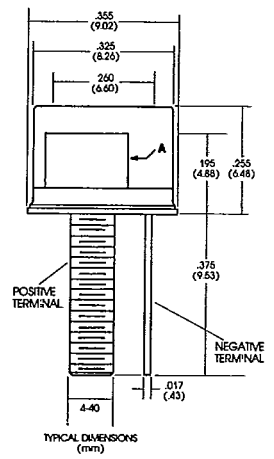

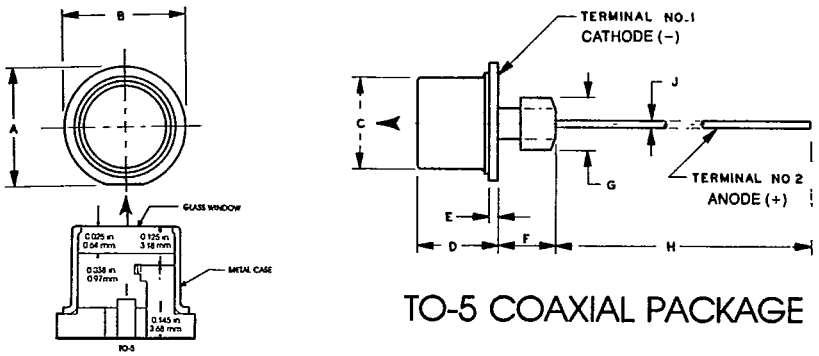

TO-5 COAXIAL PACKAGE

SYMBOL	INCHES TYP.	MILLIMETERS TYP.
A	.418	10.61
B	.437	11 10
C	325	8 25
D	285	7 23
E	030	0.76
F	.250	6 35
G	#10-32 THD.	
H	1.100	27 94
J	.020	0 51

Invisible Laser Radiation emitted from glass window

Fig. 1 — Typical Peak Power Output vs. Pulse Repetition Rate LD-220
Maximum Duty Factor — 0.02%

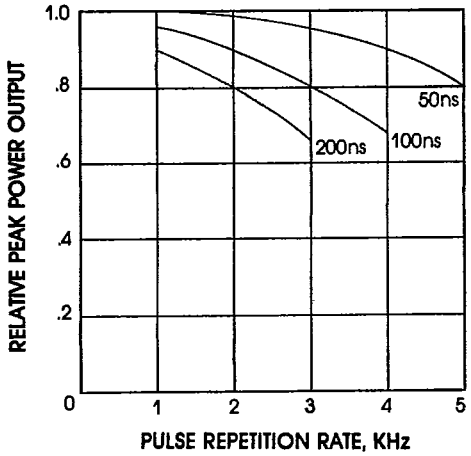

Fig. 2 — Total peak radiant flux vs. peak forward current for selected units

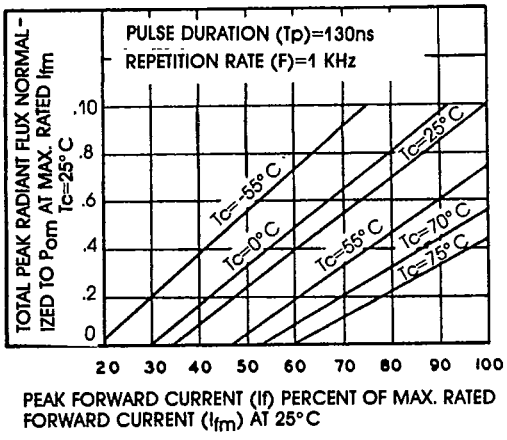

Fig. 3 — Total power collected vs. f-number

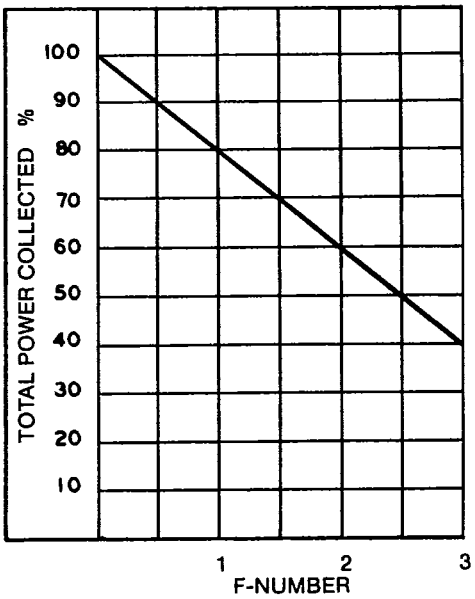

Fig. 4 — Relative Intensity vs. Wavelength LD-215

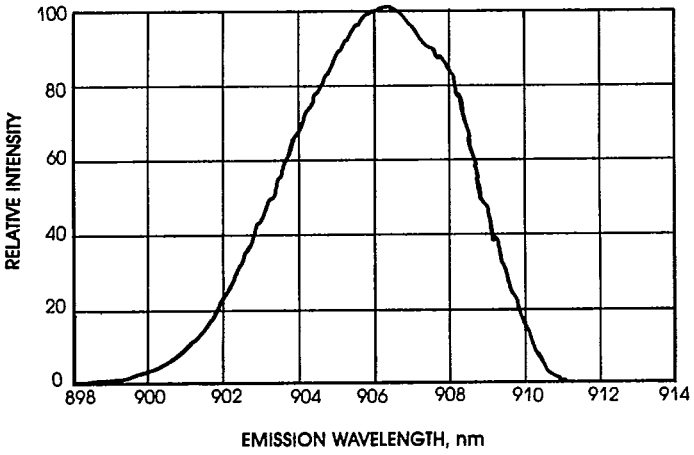

Fig. 5 — Relative Intensity vs. Beam Spread LD-215

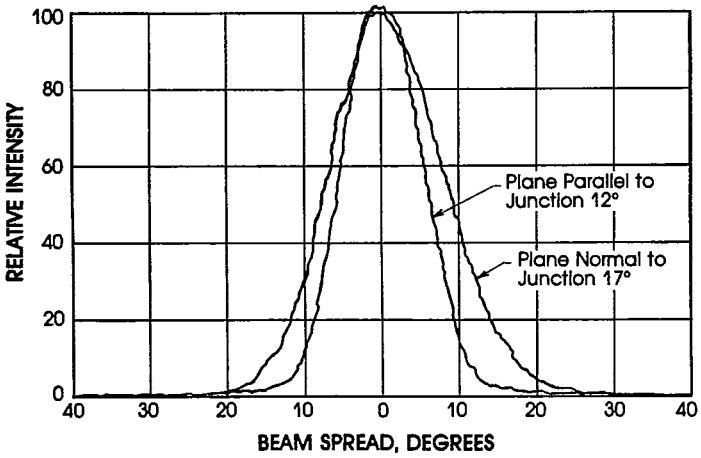

Fig. 6 — Relative Intensity vs. Beam Spread LD-230

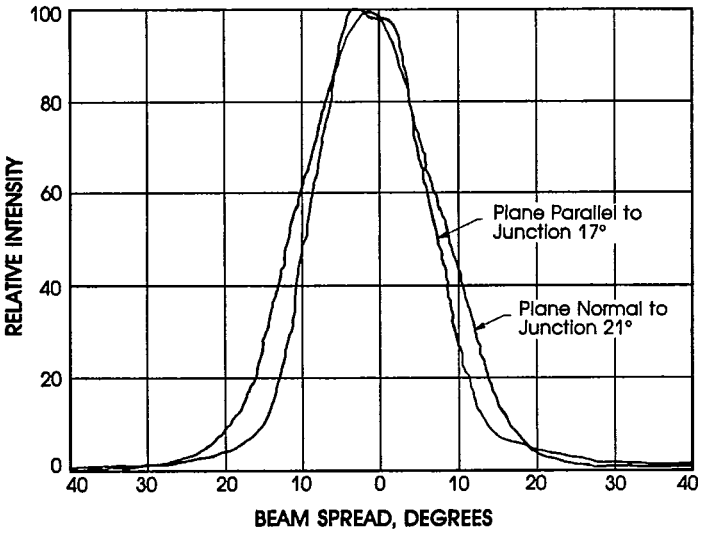

DRIVING THE LASER

High power, pulsed laser diodes are typically driven by a silicon controlled rectifier (SCR) capacitor discharge circuit. A typical circuit is shown in Figure 8.

LASER DIODE, Inc. manufactures pulsers and power supplies for this family of lasers. For laboratory experimentation the LPA-210C, pulse generator, and the LC-200 (for 115V operation) or the LC-210 (for 28V operation) power supply may be used. Custom drivers are available for specific applications.

Fig. 8

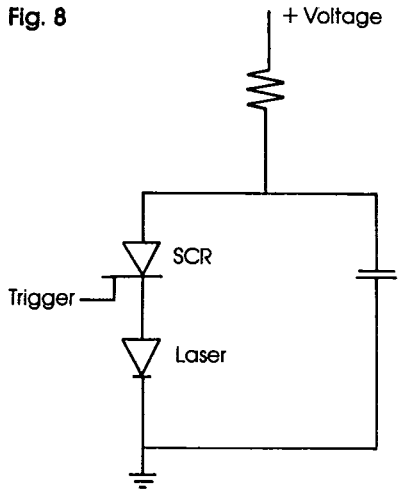

DETECTING THE LASER

LASER DIODE, Inc. manufacturers a calibrated power meter for use with its family of laser diodes. The LPD-2 is a solid state, NBS traceable power meter capable of measuring peak powers ranging from 1 to 100 watts. The LPD-2 is configured so that it may be mounted on an optical bench or rail.

For further information on lasers, drivers, or detectors please contact the Sales Department at LASER DIODE, Inc., 1130 Somerset Street, New Brunswick, NJ 08901, (phone) 201-249-7000, (fax), 201-249-9165, (twx) 710-998-0597.

LASER SAFETY

Gallium arsenide lasers emit infrared radiation which is invisible to the human eye. When in use, safety precautions should be taken to avoid the possibility of eye damage.

Do not stare directly at the device or view an operating laser at close range. If viewing is required, the beam should only be observed by reflection from a matte surface utilizing an image convertor or by use of a suitable fluorescent screen.

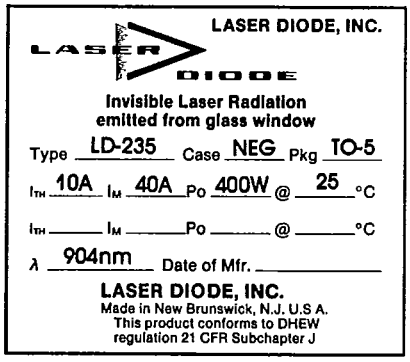

CAUTION: **Use of controls or adjustments or performance of procedures other than those specified herein may result in hazardous radiation exposure.**

LASER DIODE, Inc., reserves the right to make changes at any time as deemed practical and/or necessary to improve the design and to supply the best possible product.

Information provided is believed at this time to be accurate and reliable. No responsibility is assumed for its use, nor for any infringements on the rights of others.

*For further information on this product or others of LASER DIODE, Inc., please call:

LASER DIODE

LASER DIODE, INC.
MORGAN ELECTRONICS DIVISION
1130 SOMERSET ST., NEW BRUNSWICK, NJ 08901
(201) 249-7000 (FAX) 201-249-9165 (TWX) 710-998-0597