GSD

795-30-9

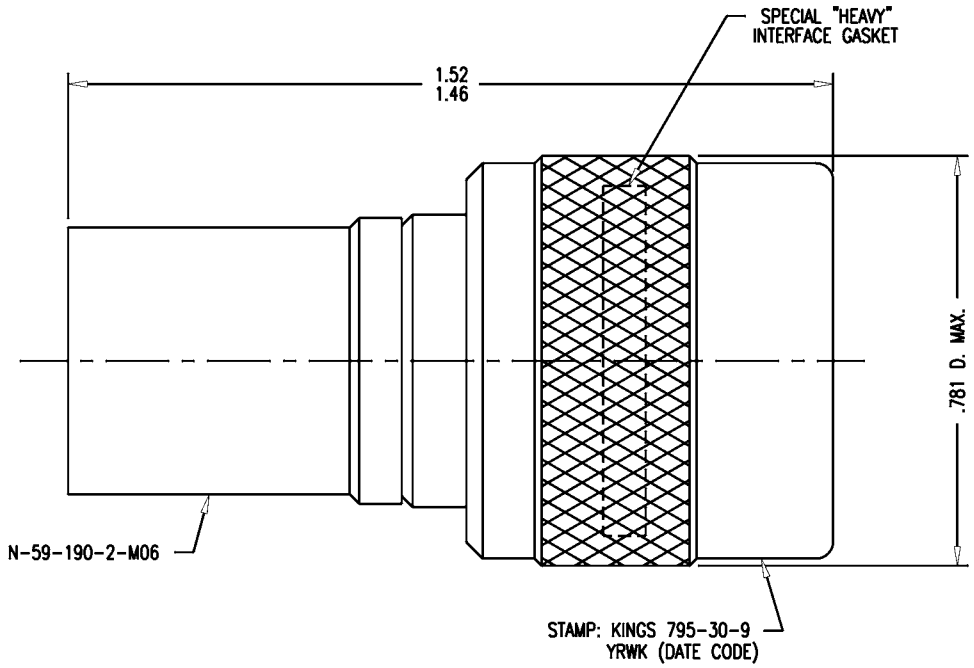

NOTES:

1. FOR USE WITH RG-393/U CABLE.
2. FOR CABLING INSTRUCTIONS SEE CP-5402.
3. FOR CRIMPING USE DIE KTH-2105.
4. INTERFACE PER MIL-STD-348, FIG. 302-1.
5. CENTER CONTACT (1-856-14MA9) SUPPLIED UNASSEMBLED.
6. MARK PACKAGE: KINGS 795-30-9
   YRWK (DATE CODE)
7. MATERIALS:
   INSULATOR: TEFLON, ASTM-D-4894
   GASKET: SIL. RUB., ZZ-R-765
   K-GRIP SLEEVE: COM. BRONZE ASTM-B-140
   OUTER CONTACT } BER. COP., ASTM-B-196
   SPRING WASHERS } BER. COP., ASTM-B-196
   ALL OTHER PARTS: BRASS, ASTM-B16
8. FINISHES:
   CENTER CONTACT: GOLD PLATE PER MIL-G-45204
   OUTER CONTACT & SPRING WASHER: SILVER PLATE PER QQ-S-365
   ALL OTHER METAL PARTS: KINGS TARNISH RESISTANT NICKEL FINISH (TR-5)
9. ELECTRICAL CHARACTERISTICS:
   NOMINAL IMPEDANCE: 50Ω
   VOLTAGE RATING: 1000 VOLTS RMS
   FREQUENCY RANGE: DC TO 11 GHz

GSD

REVISIONS

ISSUE	CHANGES
0	ER 36902 TML 03/26/01
1	CN 38130 C TML 03/26/01

WAS:
QGS0463 795-30-9

SCALE 4:1

APPROX SURFACE AREA

USED ON

REF: BOEING

PLUG, C

DRAWN	ME	DATE	05/24/95
DESIGN	MJB	DATE	05/24/95
APPR.		DATE	

KINGS
ELECTRONICS CO., INC.
ROCK HILL, SOUTH CAROLINA 29730

795-30-9