D

DO NOT SCALE

THIS DRAWING AND DESIGN HEREON CONSTITUTES A PROPRIETARY DESIGN OF PACKARD ELECTRIC DIVISION AND IS NOT TO BE DUPLICATED OR REPRODUCED WITHOUT AUTHORITY OF PACKARD ELECTRIC DIVISION.

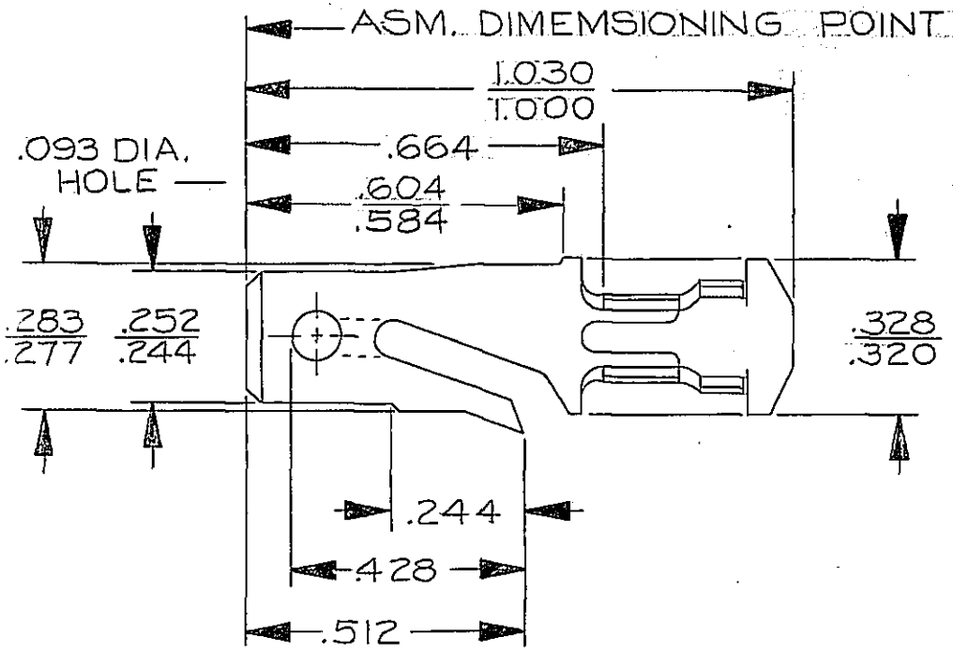

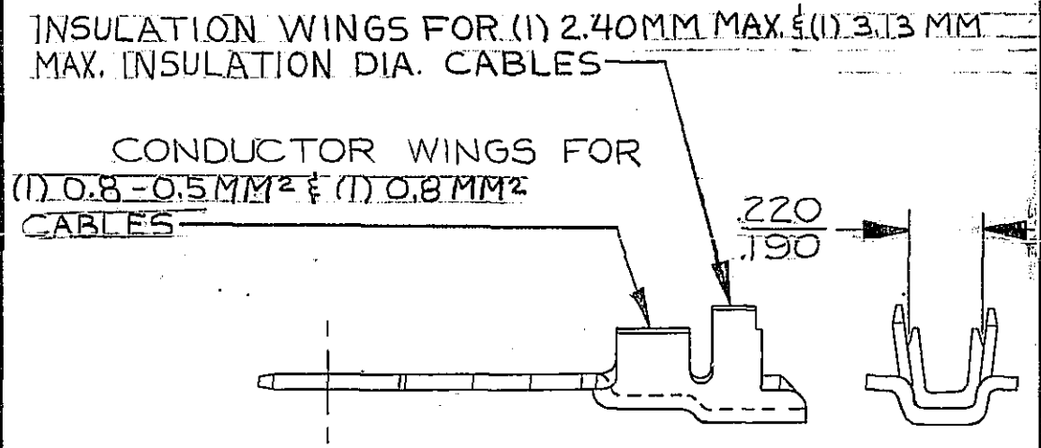

C02D2075

PART NO. 891 1677

DATE	SYM.	REVISION RECORD	C/NNO.	DR.	CK.
04SE79	–	CABLE REVISED TO			
		METRIC	70645	RAP	JS
08JN82	AZ	REVISION SYMBOL ADV'D	81339	T.C.	JM
01SE82	–	PICTURE REVISED	82155	T.W.	JM
01AU83	BA	REV. SYM. ADVANCED	86126	MS	JM

CODE NO. 6900

QC

TOLERANCE UNLESS OTHERWISE SPECIFIED
DECIMAL:
TWO PLACE ± .01
THREE PLACE ± .005

DWG. DATE 7-24-72 | SCALE NONE | DR. D. W. Sykes

EST. NO. 101097 | CK. Hubbard | DATE 7-26-72

REFERENCE NO. "D" 2962864 SH. #1 SIZE | APPR. | DATE

APPR. J S Hanefer | DATE 7-27-72

MATERIAL SPEC. .0320 THK. SAE CA 260 - BRASS 1/2 HARD - TIN PLATED

NAME TERMINAL-MALE-'56 SERIES

PART NO. 891 1677 OUTLINE DRAWING

SIZE A

PACKARD ELECTRIC DIVISION
GENERAL MOTORS CORPORATION
WARREN, OHIO

19-A
1146
ROUTING
PEB-A
~~63-R~~
~~74-R~~
~~176-R~~
~~314-R~~
~~330-R~~
~~350-R~~
~~375-R~~
~~900-R~~
~~952-R~~
~~952-T-R~~
~~1074-R~~
~~PEC-R~~
~~2052-R~~
~~2274-R~~ 148-P - 3200 R - 2400 R 3000 R 99

4174-A

PACKARD ELECTRIC