RED IS ORIGINAL

DISK #	DWG SIZE
K 3	C

DATA CONTAINED IN THIS DOCUMENT IS PROPRIETARY TO TROMPETER ELECTRONICS INC. AND SHALL NOT BE DISCLOSED, COPIED OR USED FOR PROCUREMENT OR MANUFACTURE WITHOUT EXPRESS WRITTEN PERMISSION.

REVISIONS					310-0069	SH 1
REV	EO	DESCRIPTION	DWN	APPROVED	DATE	
E	10055	SH1:PICTORIALLY REVISED SEALING SLEEVE;GENERAL UPDATE SH2:SEE ECO	DKg	KG (DAB)	12/4/92	

TABLE 1		
DASH NO	MODEL NO	CENTER CONTACT/ INTMD CONTACT TYPE
-1	PLR3455ACP	SOCKET/PIN
-2	PLR3455ACS	PIN/SOCKET

TABLE 2					
CABLE GROUP NO	CABLES ACCOMMODATED	A HEX	B MAX	C DIM	ASSEMBLE PER
-201	M17/176-00002				
-202	TWC-78-1,TROMPETER				
-203	TWC-124-1A,TROMPETER				
-204	10602,RAYCHEM				
-205	TWAC-78-1F2,TROMPETER				
-206	782600130,RAYCHEM				
-208	202-3927,MICRODOT	.255	1.60	1.43	TAI-170
-209	202-3942,MICRODOT				
-212	2524E0114, RAYCHEM				
-217	GC875TM24H,GRUMMAN				
-218	EPD22188B,RAYCHEM				
-219	252601114,RAYCHEM				
-220	GC875AR1,GRUMMAN				
-221	10614,RAYCHEM				
-222	10613,RAYCHEM				
-223	HMS2-1149,HUGHES				
-303	10598,RAYCHEM	.344	1.88	1.49	TAI-186 (8)

INCH	MM
.005	0.13
.03	0.76
.045	1.14
.255	6.48
.450	11.43
1.10	27.94
1.25	31.75
1.43	36.32

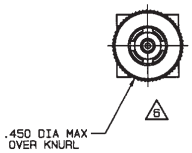

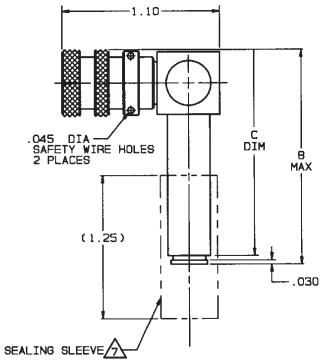

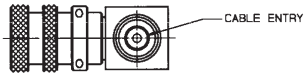

-1 -201 SHOWN

(8) STRAIN RELIEF SUPPLIED LOOSE WITH -303 ONLY

(7) SEALING SLEEVE & CRIMP BUSHING SUPPLIED LOOSE WITH EACH CONNECTOR;EXCEPT SEALING SLEEVE NOT USED ON -205,-208 & -223

(6) BOTTOM PORTION NOT SHOWN FOR CLARITY

5. EXAMPLE OF COMPLETE MODEL NO:

PLR3455AC P - 201

- PLR3455AC: BASIC MODEL NO (SEE TABLE 1)
- P: CENTER CONTACT/INTERMEDIATE CONTACT TYPE (SEE TABLE 1)
- 201: CABLE GROUP NO (SEE TABLE 2)

4. EXAMPLE OF COMPLETE PART NO:

310-0069 - 1 - 201

- 310-0069: BASIC PART NO
- 1: DASH NO CENTER CONTACT/ INTERMEDIATE CONTACT TYPE (SEE TABLE 1)
- 201: CABLE GROUP NO (SEE TABLE 2)

3. CONCENTRIC TWINAX 4 PIECE ASSY,RIGHT ANGLE FULL CRIMP CABLE PLUG,SOCKET CENTER CONTACT AND PIN INTERMEDIATE CONTACT OR PIN CENTER CONTACT AND SOCKET INTERMEDIATE CONTACT

2. FINISH: TFS-1U (500 HR SALT SPRAY), NICKEL

1. ALL DIM ARE IN INCHES

QTY	DESCRIPTION			PART NUMBER	ITEM
TOL UNLESS SPECIFIED .XX ± .03 .XXX ± .005 .XXXX± ANGLES±	TROMPETER ELECTRONICS, INC.			PLR3455AC/P/S	
DWN DKg 12/2/92	MATERIAL	CODE IDENT 14949	DRAWING NO. 310-0069	REV E	
CHK KG 12/3/92					
ENGR					
NEXT ASSY APPR DAB 12/3/92	SCALE 2/1	DATE 11/4/88	SHEET 1 OF 2		