D

PACKARD ELECTRIC DIVISION
GENERAL MOTORS CORPORATION
WARREN, OHIO

DO NOT SCALE

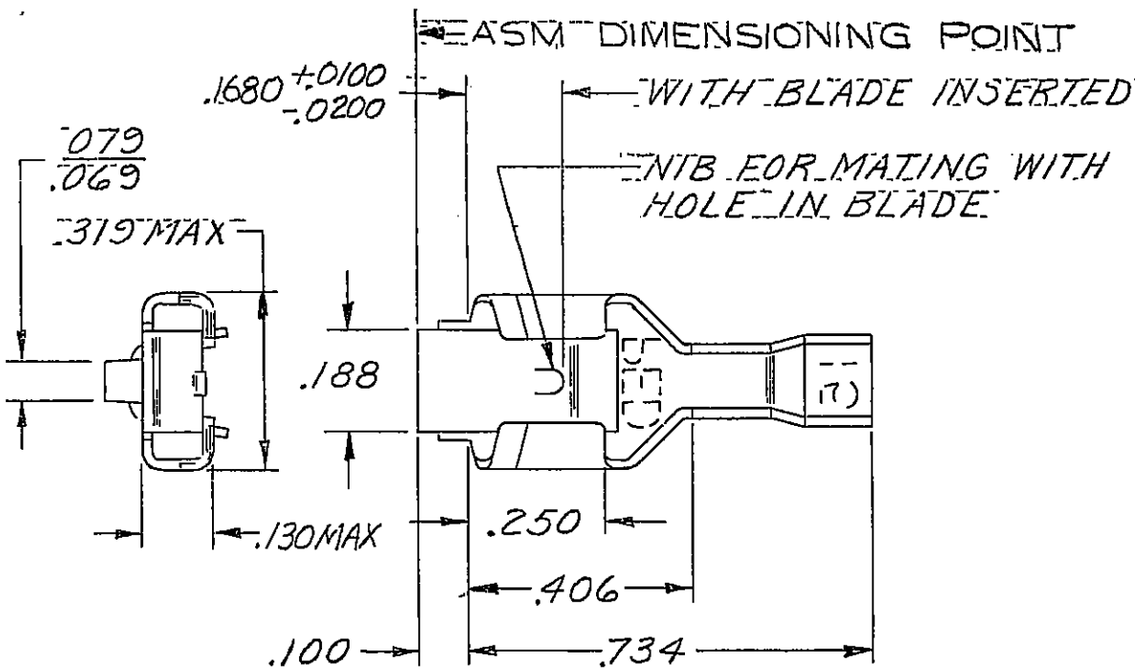

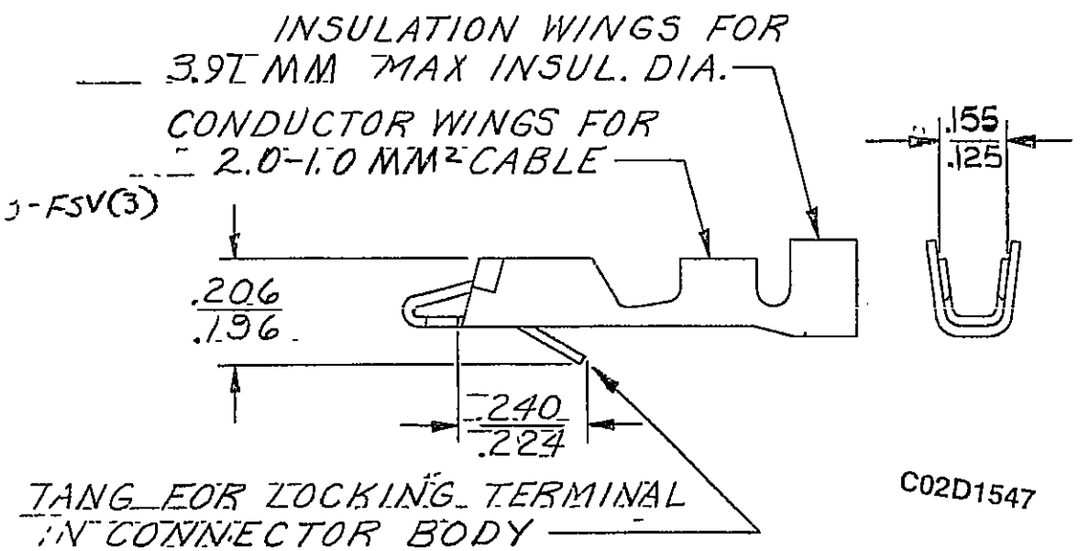

C02D1547

NOTE — TO FIT .032 x .250 BLADE.

OUTLINE DWG.

19-A

PART NO 2965511

DATE	SYM	REVISION RECORD	C/N NO
23AU93	—	CLEARED REVISION & REVISED	157171
23AU93	—	REVISED	157151
08AU02	CC1	UPDATED REV LEVEL	227558

CODE NO 6900

TOLERANCE UNLESS OTHERWISE SPECIFIED
DECIMAL ± .010
FRACTIONAL ±
ANGULAR ±

DWG DATE 4-17-57 SCALE NONE DR PLYLER
ROUTING
DEPT
OUTST
CK Pearce 2-16-60
APPR
REFERENCE 2962874-D SHEET #1
APPR EDWARDS 2/16
APPR R. E. KIRK 2-23

MATERIAL SPEC .018 THK SAE CA260 BRASS 1/2 HARD TIN PLATED
CODE NO

NAME TERMINAL-FEMALE-"56 SERIES"

PART NO 2965511
SIZE A