SIEMENS

HiRel Silicon Schottky Diode — BAT 14

Features

- **HiRel Discrete and Microwave Semiconductor**
- Medium barrier diodes for detector and mixer applications
- Hermetically sealed microwave package
- esa qualified
- ESA/SCC Detail Spec. No.: 5106/014

ESD: **E**lectro**s**tatic **d**ischarge sensitive device, observe handling precautions!

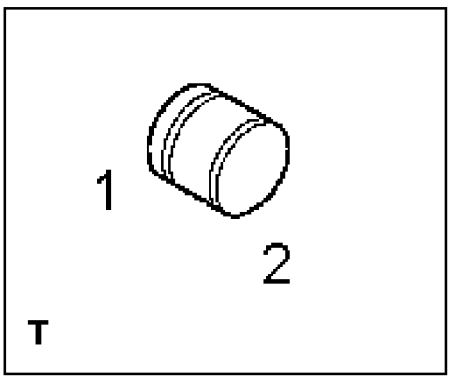

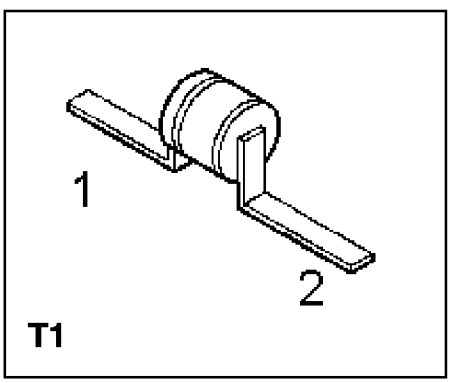

Type	Marking	Ordering Code	Pin Configuration	Package
BAT 14-013 (ql)	–	see below	1 ▶ 2	T
BAT 14-014 (ql)	–	see below	see BAT14-013	T1
BAT 14-033 (ql)	–	see below	see BAT14-013	T
BAT 14-034 (ql)		see below	see BAT14-013	T1
BAT 14-043 (ql)	–	see below	see BAT14-013	T
BAT 14-044 (ql)	–	see below	see BAT14-013	T1
BAT 14-063 (ql)	–	see below	see BAT14-013	T
BAT 14-064 (ql)	–	see below	see BAT14-013	T1
BAT 14-073 (ql)	–	see below	see BAT14-013	T
BAT 14-074 (ql)	–	see below	see BAT14-013	T1
BAT 14-093 (ql)	–	see below	see BAT14-013	T
BAT 14-094 (ql)	–	see below	see BAT14-013	T1
BAT 14-103 (ql)	–	see below	see BAT14-013	T
BAT 14-104 (ql)	–	see below	see BAT14-013	T1
BAT 14-113 (ql)	–	see below	see BAT14-013	T
BAT 14-114 (ql)	–	see below	see BAT14-013	T1
BAT 14-123 (ql)	–	see below	see BAT14-013	T
BAT 14-124 (ql)	–	see below	see BAT14-013	T1

(ql) Quality Level:		
	P: Professional Quality,	Ordering Code: Q62702D1346
	H: High Rel Quality,	Ordering Code: on request
	S: Space Quality,	Ordering Code: on request
	ES: ESA Space Quality,	Ordering Code: Q62702D1345

(see **Chapter Order Instructions** for ordering example)

Table 1 Maximum Ratings

Parameter	Symbol	Limit Values	Unit
Reverse voltage	V_R	3	V
Forward current	I_F		mA
BAT14-013, -014, -033, -034		100	
BAT14-043, -044, -063, -064		100	
BAT14-073, -074, -093, -094		50	
BAT14-103, -104, -113, -114		50	
BAT14-123, -124		50	
Power dissipation	P_{tot}		mW
BAT14-013, -014, -033, -034		100	
BAT14-043, -044, -063, -064		100	
BAT14-073, -074, -093, -094		50	
BAT14-103, -104, -113, -114		50	
BAT14-123, -124		50	
Operating temperature range	T_{op}	– 55 to + 150	°C
Storage temperature range	T_{stg}	– 65 to + 175	°C
Soldering temperature	T_{sol}	+ 220	°C
Burn-out energy [1]	E_B		Erg
BAT14-013, -014, -033, -034		5.0	
BAT14-043, -044, -063, -064		5.0	
BAT14-073, -074, -093, -094		2.0	
BAT14-103, -104, -113, -114		2.0	
BAT14-123, -124		1.0	

[1] Quoted for a single discharge of torry line during the first 2.4 ns current flow in the forward direction. General criterion for burn-out energy is a 3 dB increase in noise figure.

Electrical Characteristics

Table 2 **DC Characteristics** at T_A = 25 °C unless otherwise specified

Parameter	Symbol	Limit Values			Unit
		min.	typ.	max.	
Breakdown voltage I_R = 10 µA	$V_{(BR)}$	3	–	–	V
Reverse current V_R = 2 V	I_R	–	–	1	µA
Forward voltage 1 I_{F1} = 0.01 mA	V_{F1}				V
BAT14-013, -014, -033, -034		–	–	0.31	
BAT14-043, -044, -063, -064		–	–	0.32	
BAT14-073, -074, -093, -094		–	–	0.33	
BAT14-103, -104, -113, -114		–	–	0.35	
BAT14-123, -124		–	–	0.36	
Forward voltage 2 I_{F2} = 1 mA	V_{F2}				V
BAT14-013, -014, -033, -034		–	0.42	0.44	
BAT14-043, -044, -063, -064		–	0.44	0.45	
BAT14-073, -074, -093, -094		–	0.45	0.46	
BAT14-103, -104, -113, -114		–	0.46	0.48	
BAT14-123, -124		–	0.48	0.50	
Series resistance [2)] I_{F1} = 10 mA, I_{F2} = 50 mA	R_F				Ω
BAT14-013, -014		–	3.0	3.5	
BAT14-033, -034		–	4.0	4.5	
BAT14-043, -044		–	3.5	4.0	
BAT14-063, -064		–	4.5	5.0	
BAT14-073, -074		–	4.5	5.5	
BAT14-093, -094		–	5.5	6.5	
BAT14-103, -104		–	6.0	7.0	
BAT14-113, -114		–	7.0	8.0	
BAT14-123, -124		–	8.0	9.0	

2) $R_F = \frac{\Delta V_F}{40 \times 10^{-3}} \Omega$

Table 3 **AC Characteristics** at T_A = 25 °C unless otherwise specified

Parameter	Symbol	Limit Values			Unit
		min.	typ.	max.	
Total capacitance V_R = 0 V, f = 1 MHz	C_T				pF
BAT14-013, -014, -033, -034		–	0.35	0.60	
BAT14-043, -044, -063, -064		–	0.30	0.35	
BAT14-073, -074, -093, -094		–	0.27	0.30	
BAT14-103, -104, -113, -114		–	0.23	0.25	
BAT14-123, -124		–	0.20	0.22	
Noise figure I.F. = 30 MHz LO power = 0 dBm LO = 9.375 GHz	NF				dB
BAT14-013, -014		–	5.3	5.5	
BAT14-033, -034		–	6.3	6.5	
BAT14-043, -044		–	5.3	5.5	
BAT14-063, -064		–	6.3	6.5	
BAT14-073, -074		–	5.3	5.5	
BAT14-093, -094		–	6.3	6.5	
BAT14-103, -104		–	5.7	6.0	
BAT14-113, -114		–	7.2	7.5	
BAT14-123, -124		–	8.0	9.0	

Order Instructions

Full type variant including type variant and quality level must be specified by the orderer. For HiRel Discrete and Microwave Semiconductors the ordering code specifies device family and quality level only.

Ordering Form:

Ordering Code: Q…
BAT14- (x) (ql)
(x): Type Variant
(ql): Quality Level

Ordering Example:

Ordering Code: Q62702D1345
BAT14-014 ES
For BAT14-014 in T1 Package; ESA Space Quality Level

Further Information

See our WWW-Pages:

– Discrete and RF-Semiconductors (Small Signal Semiconductors)
  www.siemens.de/semiconductor/products/35/35.htm

– HiRel Discrete and Microwave Semiconductors
  www.siemens.de/semiconductor/products/35/353.htm

Please contact also our marketing division:

Tel.: ++89 6362 4480
Fax.: ++89 6362 5568
e-mail: martin.wimmers@hl.siemens.de

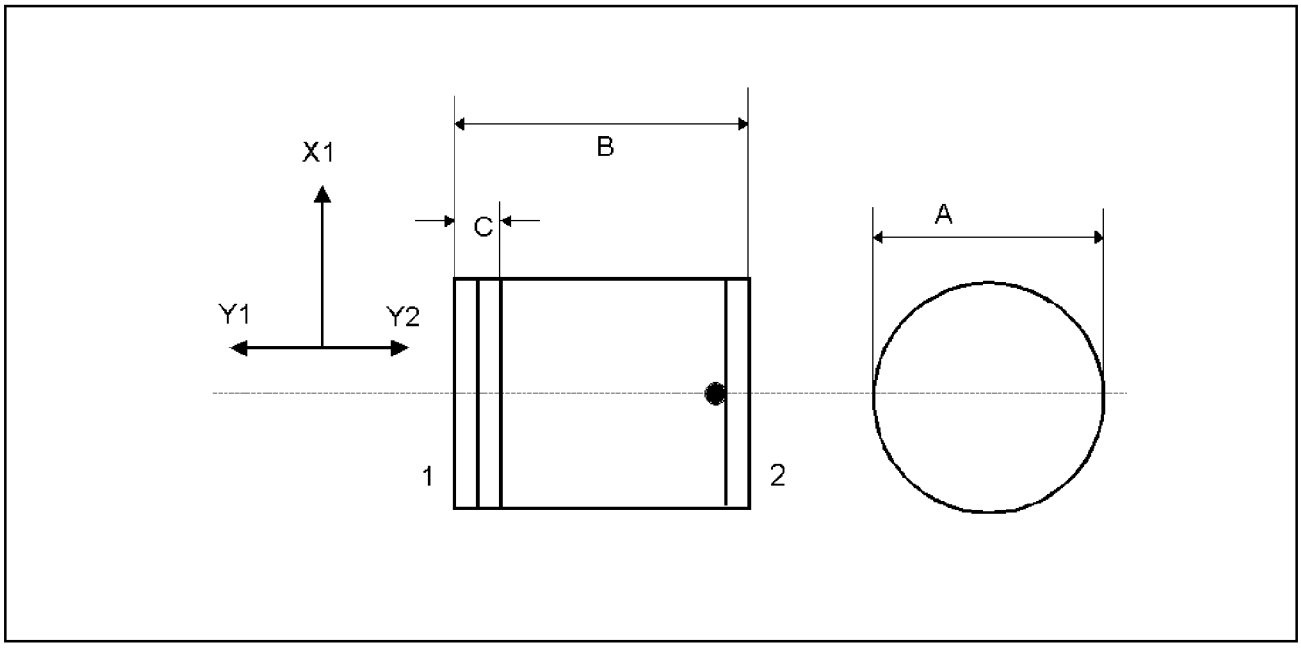

Figure 1 T Package

Symbol	Millimetre	
	min.	max.
A	1.30	1.45
B	1.15	1.35
C	–	0.4

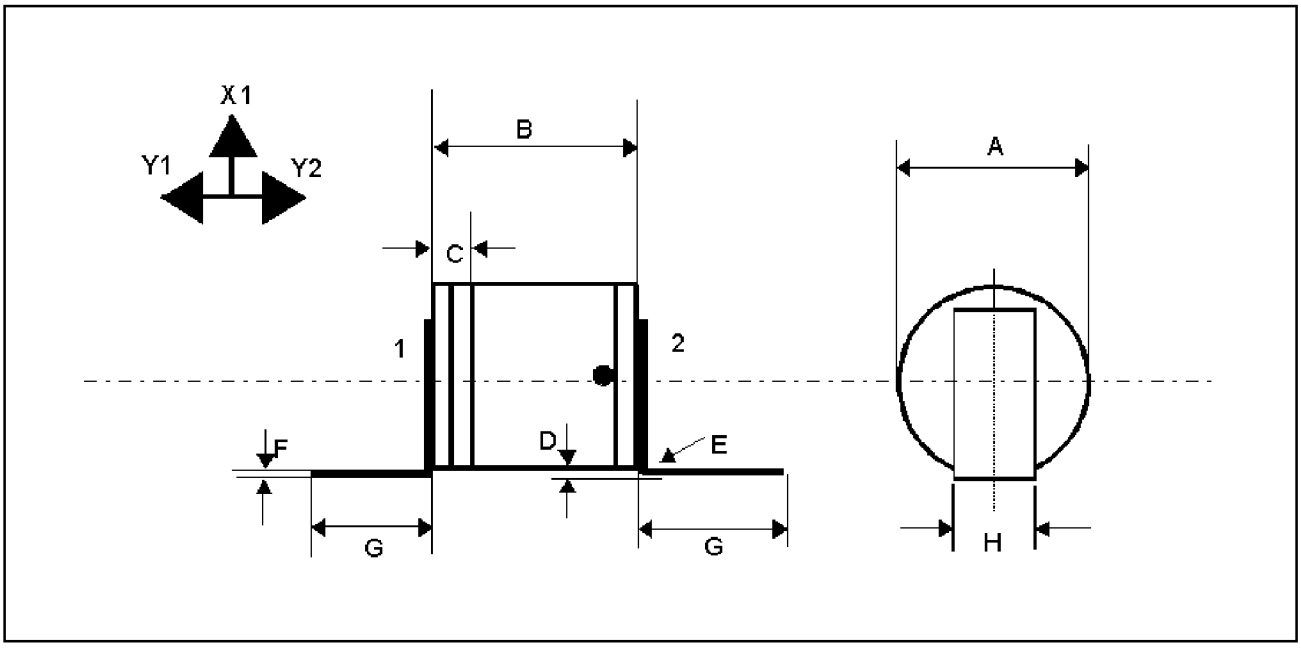

Figure 2 T1 Package

Symbol	Millimetre	
	min.	max.
A	1.30	1.45
B	1.15	1.35
C	–	0.40
D	0.10	0.50
E	–	0.30
F	0.06	0.10
G	5.50	–
H	0.40	0.60