AUTOMOTIVE GRADE

CS2082

Dual Airbag Deployment ASIC

Description

The CS2082 controls and monitors two airbag firing loops. The independent firing loops are low- and high-side controlled. Device communication is through a Serial Peripheral Interface (SPI) port, and includes frame error detection circuitry for data reliability.

Diagnostics include squib resistance measurement and continuous monitoring for shorts to ground, shorts to battery, and for open loops. The high- and low-side drivers can be individually activated to guarantee function and to identify shorts between firing loops. Additional features include power on reset, overtemperature protection, a charge pump, high-side safing sensor closure detection, an analog multiplexer, a monitor to ensure battery potential, and a programmable monitor to ensure firing potential.

Features

- Serial Input Bus
- Two Squib Outputs
- Low- and High-Side Control
- Monitors
  - Squib Resistance
  - Short to Ground or Battery
  - Battery Potential
  - Firing Potential
- Safing Sensor Detection
- 60V Peak Transient Voltage

Block Diagram

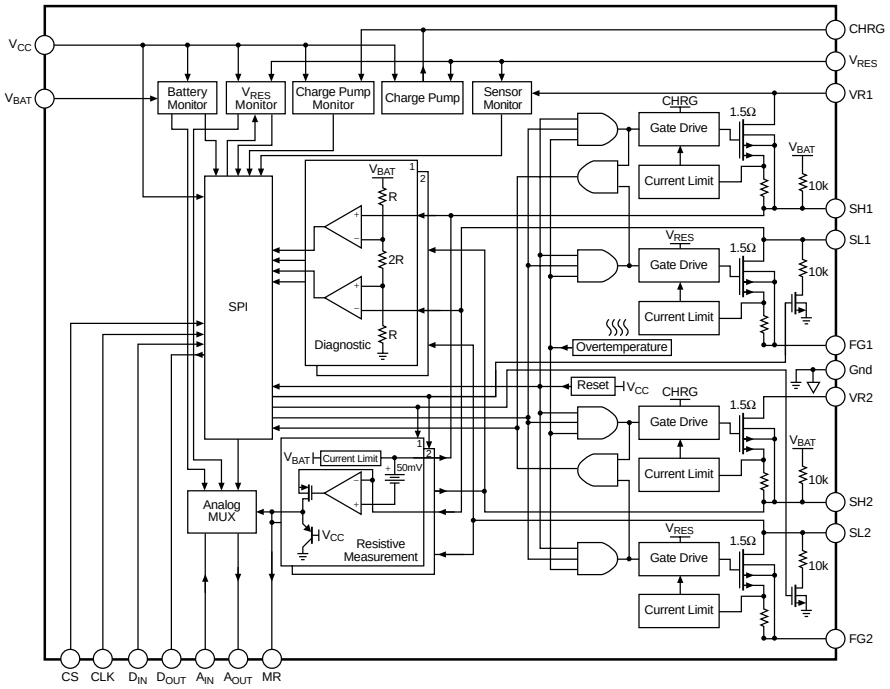

Package Options

20 Lead SOIC Wide

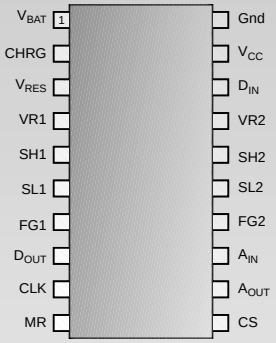

Consult Factory for 24 Lead SO Wide

Cherry Semiconductor

Cherry Semiconductor Corporation
2000 South County Trail, East Greenwich, RI 02818
Tel: (401)885-3600 Fax: (401)885-5786
Email: info@cherry-semi.com
Web Site: www.cherry-semi.com

Absolute Maximum Ratings

Storage Temperature . . . . . –40°C to 150°C
V_{BAT} . . . . . –0.3 to 24V
V_{RES} . . . . . –0.3 to 30V
V_{CC} . . . . . –0.3 to 6V
Power Dissipation (non-firing) 0.15W
Power Dissipation (both firing loops with squibs shorted) 140W
Power Dissipation (squib resistance measurement) 1.6W
Peak Transient Voltage (46V load dump @ 14V V_{BAT}) 60V
Lead Temperature Soldering
Reflow (SMD styles only) . . . . . 60 sec. max above 183°C, 230°C peak

Electrical Characteristics: 4.75V < V_{CC} < 5.25V, 8V < V_{RES} < 30V, 9V < V_{BAT} < 18V, –40°C < T_A < 85°C, unless otherwise stated.

PARAMETER	TEST CONDITIONS	MIN	TYP	MAX	UNIT
■ Supply Requirements					
V_{CC} Quiescent Current	V_{CC} = 5.25V		2	4	mA
V_{BAT} Quiescent Current	V_{BAT} = 18V		2.5	5.0	mA
V_{BAT} Measurement Current	V_{BAT} = 18V, R_{SQUIB} = 1Ω			80	mA
V_{RES} Quiescent Current	V_{RES} = 30V			1	mA
V_{RES} Firing Current	V_{RES} = 30V			3	mA
■ Power on Reset	**V_{BAT} = 9V, V_{RES} = 10V**				
Power Reset Active Voltage	V_{CC} Falling	3.50	4.00	4.25	V
Power Reset Off Voltage	V_{CC} Rising	3.65	4.20	4.50	V
Hysteresis		50			mV
■ Low Side Driver	**V_{RES} = 8V = V_{RX}, V_{CC} = 5V, V_{BAT} = 8V**				
Saturation Voltage	I = 1.2A			1.8	V
Current Limit (I_{LIMIT})	$V_{SLX} - V_{FGX}$ = 5V	1.2	1.6	2.0	A
Turn-on Delay Time	From CS falling Edge, $I_D = 0.9 \times I_{LIMIT(MIN)}$			75	µs
Turn-off Delay Time	From CS falling Edge, $I_D = 0.1 \times I_{LIMIT(MIN)}$			25	µs
■ High Side Driver	**V_{RES} = 8V = V_{RX}, V_{CC} = 5V, V_{BAT} = 8V**				
Saturation Voltage	I = 1.2A			1.8	V
Current Limit (I_{LIMIT})	$V_{RX} - V_{SHX}$ = 5V	1.2	2.0	2.5	A
V_{R1} Quiescent Current Drivers off	$V_{RX} = V_{RES}$ = 30V			1	mA
V_{R2} Quiescent Current Drivers off	$V_{RX} = V_{RES}$ = 30V			100	µA
Turn-on Delay Time	From CS falling Edge, $I_D = 0.9 \times I_{LIMIT(MIN)}$			100	µs
Turn-off Delay Time	From CS falling Edge, $I_D = 0.1 \times I_{LIMIT(MIN)}$			25	µs
■ Thermal Shut Down					
Thermal Shutdown Temp	Guaranteed by Design	150	180	210	°C
Thermal Hysteresis	Guaranteed by Design	30	40	60	°C
Time to Thermal Shutdown	R_{SQUIB} = 0, V_{RX}= 30V, T = 85°C Guaranteed by Design	7			ms

Electrical Characteristics: 4.75V < V_{CC} < 5.25V, 8V < V_{RES} < 30V, 9V < V_{BAT} < 18V, –40°C < T_A < 85°C, unless otherwise stated.

PARAMETER	TEST CONDITIONS	MIN	TYP	MAX	UNIT
■ **Squib Resistive Measurements**	**V_{CC} = 5V, R_{MR} = 49.9Ω, V_{RES} = 30V**				
Squib Differential Voltage	V_{DIFF} = SHx - SLx,R_{SQUID} = 1Ω/10Ω	48	55	62	mV
Difference Between SHx & MR current – SHx reference	I_{SQUIB} = 50mA	–1		1	%
SHxCurrent Limit SLx Current Limit	R_{SQUIB} = 0 R_{MR} = 0	67 77	100 115	133 153	mA
MR Voltage Clamp		V_{CC} – 0.3		V_{CC} + 0.3	V
Turn On Delay Time excluding external Capacitors				100	µs
Turn off Delay Time				50	µs
■ **Short Measurements**	**V_{CC} = 5V, V_{RES} ≥ V_{BAT}, V_{RX} ≥ V_{BAT}**				
SHx pull-up resistance to V_{BAT} SLx pull-down resistance	V_{BAT} = 18V	4 4	10 10	17 17	kΩ kΩ
Pull-up resistor matching Pull-down resistor matching		–5 –5		5 5	% %
Short to V_{BAT} Trip	SH_X short to Battery SL_X bit set to 1	0.73 × V_{BAT}	0.75 × V_{BAT}	0.77 × V_{BAT}	V
Short to Gnd Trip	Squib short to Gnd SG_X bit set to 1	0.23 × V_{BAT}	0.25 × V_{BAT}	0.27 × V_{BAT}	V
■ **V_{BAT} Monitoring**	**V_{CC} = 5V, External V_{BAT} Diode not included, V_{RES} = 30V**				
V_{BAT} Low Trip	BL bit set to 1 when below trip	7.5	8.5	9.5	V
V_{BAT} High Trip	BL bit set to 0 when above trip	8	9	10	V
■ **V_{RES} Monitoring**	**V_{CC} = 5V, V_{BAT} = 18V**				
V_{RES} Low Trip	$6d AUX register b0 = 0	15.7	17.5	19.3	V
V_{RES} High Trip	$6d AUX register b0 = 0	16.5	18.5	20.5	V
V_{RES} Low Trip	$6d AUX register b0 = 1	21.5	24.0	26.5	V
V_{RES} High Trip	$6d AUX register b0 = 1	22.5	25	27.5	V
■ **Safing Sensor Monitor**					
External Resistance Trip Range	SSC bit set when resistance is less	200	400	800	Ω
■ **Charge Pump and Monitor**	**V_{CC} = 5V, V_{BAT} = 10V**				
Oscillator Frequency	V_{RES} = 10V	200		800	kHz
Charge Pump charge time	C_{CHG} = 0.1µF,V_{RES} = 8, Chrg from 8V to 14V			20	ms
Charge Pump Low Voltage	CL bit set to 1 when below trip	14.5	16.0	17.5	V
Charge Pump High Voltage	CL bit set to 0 when above trip	15.0	17.5	18.0	V

Electrical Characteristics: 4.75V < V_{CC} < 5.25V, 8V < V_{RES} < 30V, 9V < V_{BAT} < 18V, –40°C < T_A < 85°C, unless otherwise stated.

PARAMETER	TEST CONDITIONS	MIN	TYP	MAX	UNIT
■ **Analog MUX**	**V_{CC} = 5V**				
A_{OUT} Output Range		0.1		V_{CC} – 0.1	V
A_{IN} Input Range		0		V_{CC}	V
MUX internal voltage drop	I_{OUT} = 100µA			100	mV
Proportion of V_{BAT} on A_{OUT} – V_{BAT} selected		23	25	27	%
A_{OUT} Impedance – V_{BAT} selected		6	15.0	35	kΩ
Proportion of V_{RES} on A_{OUT} – V_{RES} selected		15	17	19	%
A_{OUT} Impedance – V_{RES} selected		6.0	12.5	25.5	kΩ
■ **Digital Inputs – D_{IN}, CLK, CS**	**V_{CC} = 5.25V, V_{BAT} = 18V, V_{RES} = 30V**				
Input Low Voltage (V_{IL})		0		0.3 × V_{CC}	V
Input High Voltage (V_{IH})		0.7 × V_{CC}		V_{CC}	V
Input Voltage Hysteresis		100			mV
Input Pull Down Current (I_{IH})		50	100	200	µA
■ **Digital Outputs – D_{OUT}**	**V_{CC} = 4.75V, V_{BAT} = 18V, V_{RES} = 30V**				
Output Low Voltage (V_{OL})	I_{SINK} = 1mA			0.4	V
Output High Voltage (V_{OH})	I_{SOURCE} = 1mA	V_{CC} – 0.75			V
Tri-State Pull-up Current	CS = 0, D_{OUT} = 0	50	100	200	µA
Rise/Fall Time	C_{LOAD} = 200pF			50	ns

Package Pin Description

PACKAGE PIN #	PIN SYMBOL	FUNCTION
20 Lead SO Wide		
1	V_{BAT}	Battery Supply Voltage.
2	CHRG	Charge pump Storage.
3	V_{RES}	Reserve Supply Voltage.
4	VR1	Loop 1 Supply.
5	SH1	Squib 1 High Side.
6	SL1	Squib 1 Low Side.
7	FG1	Loop 1 Return.
8	D_{OUT}	Serial Port output.
9	CLK	Serial Port Clock.
10	MR	Squib Resistance Output Current.
11	CS	Serial Port Chip Select.
12	A_{OUT}	Analog Mux Output.
13	A_{IN}	Analog Mux Input.
14	FG2	Loop 2 Return.
15	SL2	Squib 2 Low Side.
16	SH2	Squib 2 High Side.
17	VR2	Loop 2 Supply.
18	D_{IN}	Serial Port Input.
19	V_{CC}	5V Regulated Supply.
20	Gnd	Signal Ground.

The CS2082 is an automotive air bag deployment and diagnostic system for up to two independent firing loops. Communication with the ASIC is through a synchronous serial port using Serial Peripheral Interface (SPI) protocol, at CLK rates up to 2MHz.

Data is simultaneously sent from the D_{OUT} pin and received at the D_{IN} pin under the control of the CS and CLK pins. Error detection logic is included in the SPI to guard against glitches on either the CS or CLK logic signal inputs. A valid CS frame must contain exactly 8 CLK cycles for each CS low-high-low transition. Detection of a frame error will cause input data for that frame to be ignored and an error code ($FE) to be sent during the next valid CS frame.

The data at D_{OUT} is sent MSB first and is guaranteed valid before the rising edge of CLK. The 8 bits sent from D_{OUT} after CS goes high will be the previous data received, data from either the status register or the fault register, or the CS frame error code ($FE).

The data at D_{IN} is received MSB first and must be valid before the rising edge of CLK. The 8 bits received at D_{IN} before CS goes low will be the current command. Table 1 defines the legal 8-bit SPI commands, where d = four data bits and x = don't care. All other inputs will be ignored.

Table 1 – Valid CS2082 SPI Commands

COMMAND	FUNCTION
$1x	Read Status Register
$2x	Read Fault Register
$3d	Squib Resistance Measurements
$4d	Analog Mux Select
$5d	Low Side Switch Control
$6d	Auxiliary Control Register
$Ad	High Side Switch Control

Read Status Register – $1x

The $1x command causes the data contained in the status register to be sent from D_{OUT} during the next valid CS frame. The status register reports the condition of the firing paths, closure detection of an external safing switch between the V_{RES} and VR1 pins, the state of the internal charge pump, and the state of external V_{BAT} and V_{RES} power supplies. The status register is an 8-bit active-high register with bit definition as shown in Table 2.

Table 2 – Status Register Bit Definition

BIT	VALUE	DESCRIPTION
D7	0	Always logic zero
D6	0	Always logic zero
D5	F1	SH1 and SL1 switches active
D4	F2	SH2 and SL2 switches active
D3	SSC	Safing Sensor is closed
D2	RL	VRES voltage is below trip
D1	BL	VBAT voltage is below trip
D0	CL	CHRG voltage is below trip

Read Fault Register – $2x

The $2x command causes the data contained in the fault register to be sent from D_{OUT} during the next valid CS frame. The register reports fire path faults by continuously comparing each path to a portion of the voltage at the V_{BAT} pin. The fault register is an 8-bit active-high register with bit definition as shown in Table 3.

Table 3 – Fault Register Bit Definition

BIT	VALUE	DESCRIPTION
D7	0	Always logic zero
D6	0	Always logic zero
D5	0	Always logic zero
D4	0	Always logic zero
D3	SB2	High Side of Squib 2 above 75% V_{BAT} trip threshold
D2	SB1	High Side of Squib 1 above 75% V_{BAT} trip threshold
D1	SG2	Low Side of Squib 2 below 25% V_{BAT} trip threshold
D0	SG1	Low Side of Squib 1 below 25% V_{BAT} trip threshold

Each SHx pin is pulled up to V_{BAT} while each SLx pin is pulled down to Gnd through separate nominal 10kΩ resistors, thus biasing each normal fire path to about $1/2\,V_{BAT}$. An open fire path has been detected if both the SBx *and* SGx bits are set for that path. To detect faults between fire paths and to test driver function, each driver should be activated individually. The activated driver should cause its respective fault bit to be set. If an activated driver does not set its respective fault bit, a driver fault has been detected. If an activated driver causes the fault bit of an inactivated driver to be set, a fault *between* fire paths has been detected. Table 4 defines the implied ranges over which the various types of faults can be detected.

Table 4 – Implied Resistive Fault Detection Ranges

Fault	Min	Nom	Max	Unit
Short to Ground	1	5	10	kΩ
Short to Battery	1	5	10	kΩ
Open	5	20	40	kΩ
Driver Open	1	5	10	kΩ
Driver Shorted	1	5	10	kΩ
Squib to Squib	1	5	10	kΩ

Squib Resistance Measurement – $3d

The $3d command activates squib resistance measurement for the selected firing path. The respective active-high bit definitions are shown in Table 5. At power-up, the default path is 'None'.

Table 5 – Squib Resistance Path Select

D3	D2	D1	D0	Path
x	x	0	0	None
x	x	0	1	Squib 1
x	x	1	0	Squib 2
x	x	1	1	None

Squib resistance is measured by forcing 50mV nominal (proportional to V_{CC}) across the squib. The resulting squib current is passed to an external load resistor at the MR pin, converting the current back into a voltage. This voltage may be read directly at the MR pin, or passed through the analog multiplexer to be read at the A_{OUT} pin. The known values of the squib differential voltage (V_{DIFF}) and the MR resistance (R_{MR}), and the measured MR voltage (V_{MR}) indicate squib resistance such that:

$$R_{SQUIB} = \frac{R_{MR} \times V_{DIFF}}{V_{MR}}$$

Typical MR voltage response for R_{MR} = 50Ω over a squib resistance range of 0.6Ω to 6.0Ω is illustrated in Graph 1.

Graph 1 – Typical MR Voltage Response

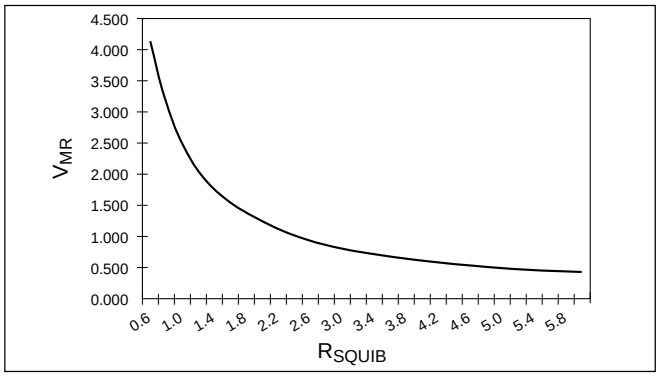

Measurement accuracy of the CS2082 with combined tolerances and with an external 1% load resistor at the MR pin can be defined by the equation:

$$R_{SQ(E)} = \frac{V_{DIFF(IDEAL)} \times R_{MR(IDEAL)}}{\left(\frac{V_{DIFF} \pm 12\%}{R_{SQ(A)}}\right) \pm 1\% \times R_{MR} \pm 1\%}$$

$$= R_{SQ(A)} +12.5\%/-15.94\%$$

where $V_{DIFF(IDEAL)}$ and $R_{MR(IDEAL)}$ are the assumed values for the squib resistance solution algorithm, $R_{SQ(A)}$ is the actual squib resistance, and $R_{SQ(E)}$ is the result of the solution algorithm. An additional error may be added if the MR voltage is measured through the analog multiplexer.

In operation, current is sourced from V_{BAT} to the SHx pin, through the squib to the SLx pin, and returned to ground through the MR load resistor. Current clamps are provided for both the SHx and SLx pins and a voltage clamp is provided for the MR pin. These clamps along with the resolution of the ADC are the constraining factors for the minimum and maximum measurable squib resistance values.

The minimum measurable squib resistance can be defined as:

$$\frac{V_{DIFF(MIN)}}{I_{LIM(MAX)}} \le R_{SQUIB(MIN)} \le \frac{V_{DIFF(MIN)} \times R_{MR(MIN)}}{V_{CLAMP(MAX)}}$$

The maximum measurable squib resistance can be defined as:

$$R_{SQUIB(MAX)} = \frac{V_{DIFF(MAX)} \times R_{MR(MAX)} \times (2^n - 1)}{V_{CC(MIN)}}$$

In the above equations, V_{DIFF} is the SHx-SLx forced differential voltage, I_{LIM} is the SHx resistive measure current limit, V_{CLAMP} is the MR clamp voltage, R_{MR} is the toleranced MR load resistor value and n is the number of bits of resolution of the ADC.

It should be noted that during resistive measurements, faults to Gnd or BAT (dependent on V_{BAT} voltage and squib resistance) may be reported by the fault register and should be ignored.

Power Dissipation during resistive measurement can be calculated as:

$$P = I_{SQUIB}\,(V_{BAT} - V_{DIFF}) - (I_{SQUIB} \times R_{MR})$$

where V_{BAT} is the voltage at the CS2082 V_{BAT} pin and I_{SQUIB} is the measurement current through the squib. A

typical value for P is 300mW when V_{BAT} = 13.5, V_{DIFF} = 50mV, R_{SQUIB} = 2Ω and R_{MR} = 49.9Ω.

The resultant increase in power dissipation will cause a corresponding increase in die temperature which will cause a corresponding decrease in time to thermal shutdown of the CS2082. To minimize the impact of squib resistive measurements on time to thermal shutdown a 5% duty cycle is recommended.

Analog Mux – $4d

The $4d command selects one of five states at the A_{OUT} pin. The states are: High-Z; MR voltage; A_{IN} voltage; proportion of V_{BAT}; proportion of V_{RES}. The active-high Analog Mux select register bit definitions are shown in Table 6. All other states will be interpreted as High-Z. At power-up, the default state is 'High-Z'.

Table 6 – Analog MUX Output Select

D3	D2	D1	D0	State
0	0	0	0	High-Z
0	0	0	1	MR
0	0	1	0	AIN
0	1	0	0	BAT
1	0	0	0	RES

Low Side Switch Control – $5d

The $5d command activates the low side switches. When a data bit is low that switch is turned on. More than one switch can be activated at a time. Bit assignment is shown in Table 7. At power-up, no switches are active.

Table 7 – Low Side Switch Select

D3	D2	D1	D0	Active
x	x	0	0	BOTH
x	x	0	1	SL2
x	x	1	0	SL1
x	x	1	1	NONE

Auxiliary Control Register - $6d

The $6d command selects the V_{RES} Monitoring trip threshold. The threshold determines when the $1x Status Register reports V_{RES} = 1. Bit assignment is shown in Table 8. At power-up, default trip is 17V.

Table 8 – V_{RES} Monitor Trip Select

D3	D2	D1	D0	Trip
x	x	x	0	17V
x	x	x	1	23V

High Side Switch Control – $Ad

The $Ad command activates the high side switches. When a data bit is high, that switch is turned on. More than one switch can be activated at a time. Bit assignment is shown in Table 9. Note that the $5d and $Ad commands are binary complements, i.e., by sending 1010xx11, both high side switches are activated, and by sending the complement 0101xx00, both low side switches are activated. At power-up, no switches are active.

Table 9 – High Side Switch Select

D3	D2	D1	D0	Active
x	x	0	0	NONE
x	x	0	1	SH1
x	x	1	0	SH2
x	x	1	1	BOTH

Application Diagram

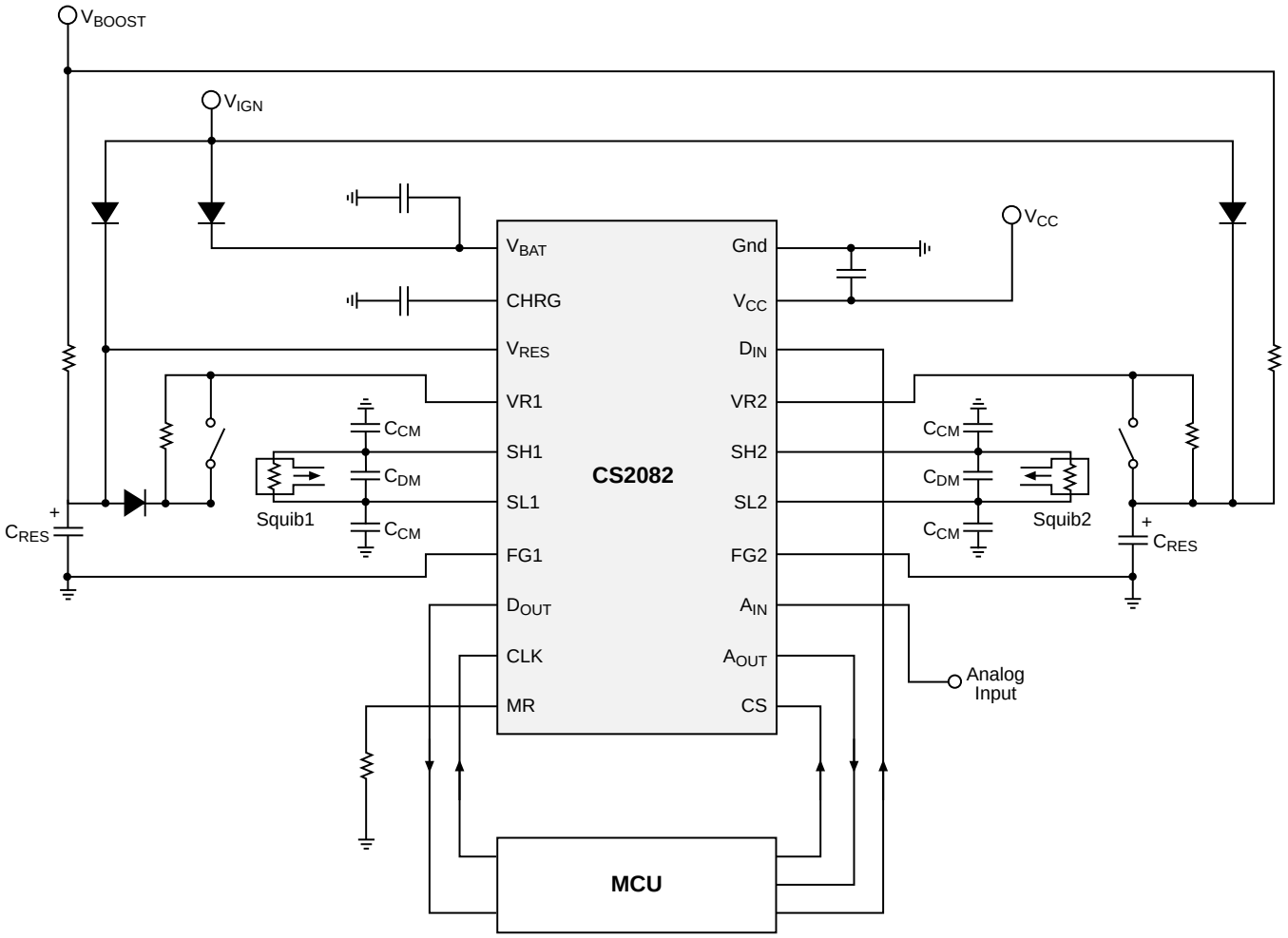

Package Specification

PACKAGE DIMENSIONS IN mm (INCHES)

Lead Count	D Metric Max	D Metric Min	D English Max	D English Min
20 Lead SOIC Wide	13.00	12.60	.512	.496

PACKAGE THERMAL DATA

Thermal Data		20 Lead SOIC Wide	
$R_{\Theta JC}$	typ	17	°C/W
$R_{\Theta JA}$	typ	90	°C/W

Surface Mount Wide Body (DW); 300 mil wide

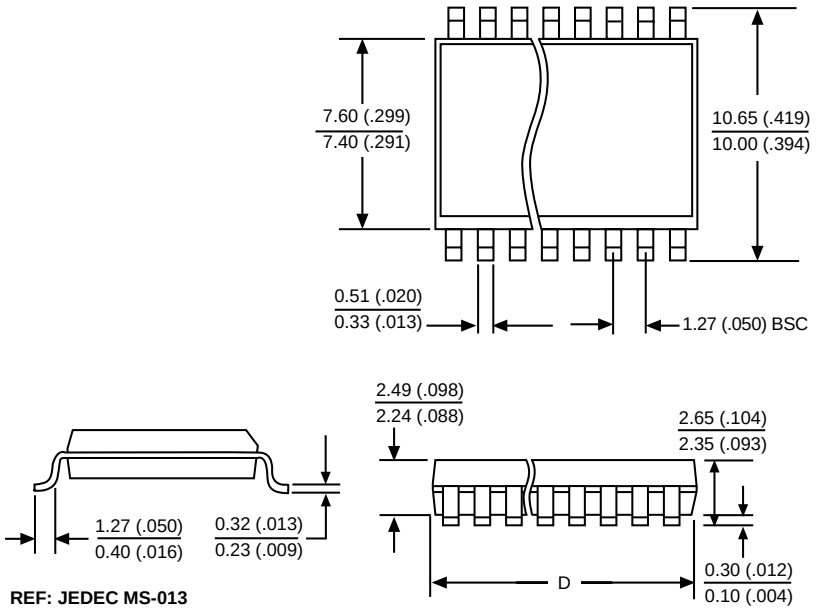

Ordering Information

Part Number	Description
CS2082EDW20	20 Lead SO Wide
CS2082EDWR20	20 Lead SOIC Wide *(tape & reel)*

Cherry Semiconductor Corporation reserves the right to make changes to the specifications without notice. Please contact Cherry Semiconductor Corporation for the latest available information.

 © 2000 Cherry Semiconductor Corporation