JYEBAO www.jyebao.com.tw

N8300P-0141	N Jack Solder Clamp For RG402; 11GHz VSWR 1.2	50Ω

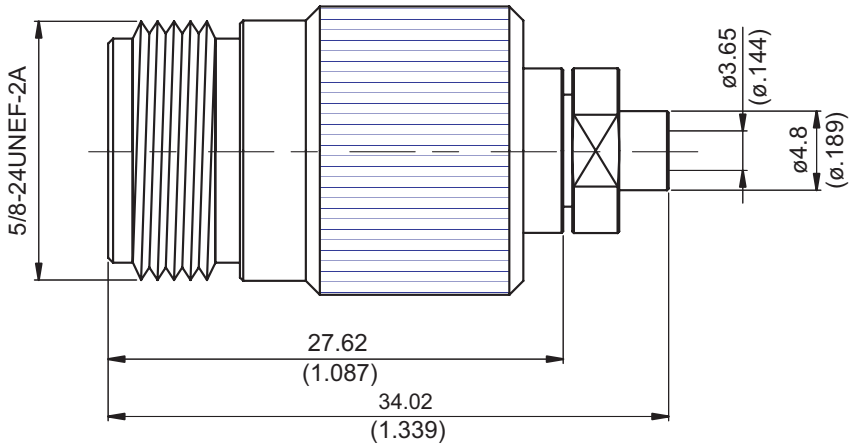

Parts	Material	Plating (Micro-inch)
Solder Nut	Brass	Gold 4 Over Nickel-Phosphorus Alloy 80 Over Copper 20
Contact Body	Brass	Tin-Zinc-Copper-Alloy 100 Over Copper 50
Contact Pin	Beryllium Copper	Gold 4 Over Nickel-Phosphorus Alloy 80 Over Copper 20
Insulator	Teflon	
Body	Brass	Tin-Zinc-Copper-Alloy 100 Over Copper 50

Suitable Cables: Semi-rigid.141

This part number complies with RoHS.
Notice: JYEBAO reserves the right to make modifications deemed appropriate.

JYEBAO www.jyebao.com.tw

N	N8300P-0141
Interface	
MIL-STD-348B	
Electrical Data	
Impedance	50Ω
Frequency range	DC to 11GHz
VSWR	≦1.2 (DC to 11GHz)
Insertion loss	≦0.05 x $\sqrt{f(GHz)}$ dB
Insulation resistance	≧5000MΩ
Contact resistance inner conductor	≦1.5mΩ
Contact resistance outer conductor	≦1mΩ
Dielectric withstanding voltage (at sea level)	2500 V rms
Working voltage (at sea level)	1000 V rms
Mechanical Data	
Recommended coupling nut torque	6 to 10 inch lbs
Coupling proof torque	15 inch lbs
Contact captivation-axial	≧6.3 lbs
Durability (mating)	≧500
Environmental Data	
Temperature range	-65°C to +165°C
Thermal shock	MIL-STD-202, Method 107, Condition B
Moisture resistance	MIL-STD-202, Method 106
Corrosion	MIL-STD-202, Method 101, Condition B
RoHS	Compliant
Tooling	
Soldering fixture	ST-008
Insert for .141 semi-rigid cable	ST-010
Locator tool	ST-011, ST-N83
Soldering gauge	ST-0.5

Notice: JYEBAO reserves the right to make modifications deemed appropriate.

JYE BAO CO., LTD.

CABLE ASSEMBLY INSTRUCTION

N8300P-0141	DATE	2021/01/15	REV	—

A

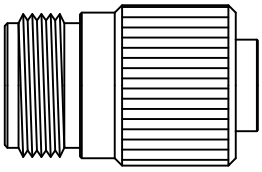

BODY

B

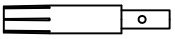

CONTACT PIN

C

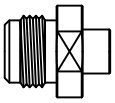

SOLDER NUT

DIAGRAM	ASSEMBLY INSTRUCTION
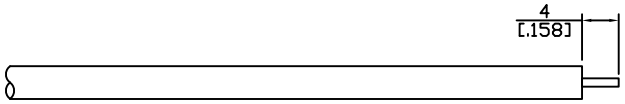	Step 1: STRIP AS SHOWN.
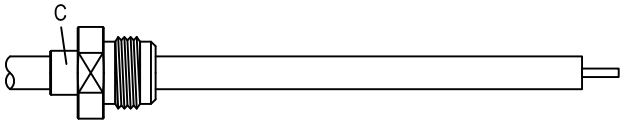	Step 2: SLIDE SOLDER NUT " C " OVER CABLE.
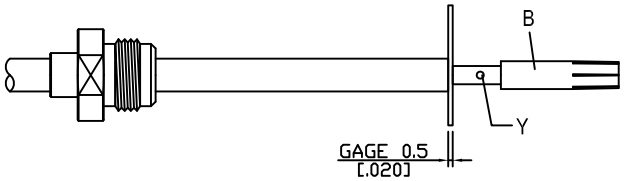	Step 3: PUT 0.5 MM GAGE ST-0.5 IN PLACE, INSERT CABLE'S CENTER CONDUCTOR INTO CENTER PIN " B " AND SOLDER IN " Y ".
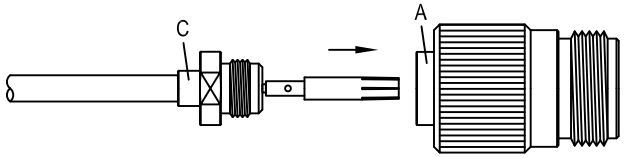	Step 4: SCREW SOLDER NUT " C " ON THE CONNECTOR BODY " A ".
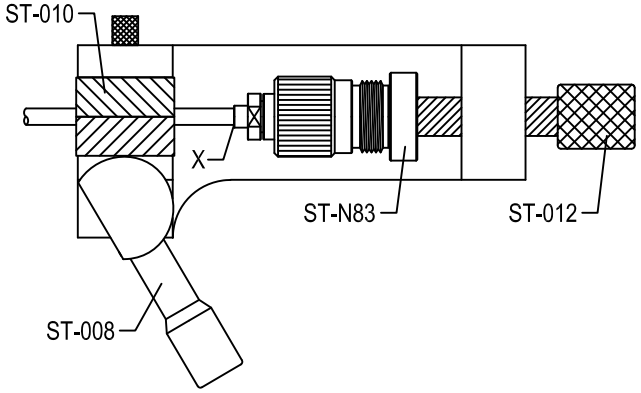	Step 6: USE SOLDERING FIXTURE " ST-008 ", INSERT TOOL " ST-010 " AND LOCATOR TOOL " ST-011 " AND " ST-N83 "TO THE CONNECTOR. SOLDER IN " X ".

This part number complies with RoHS.

Notice: JYEBAO reserves the right to make modifications deemed appropriate.

APPROVED	CHECKED	DRAWING
		Albert

N8300P-0141

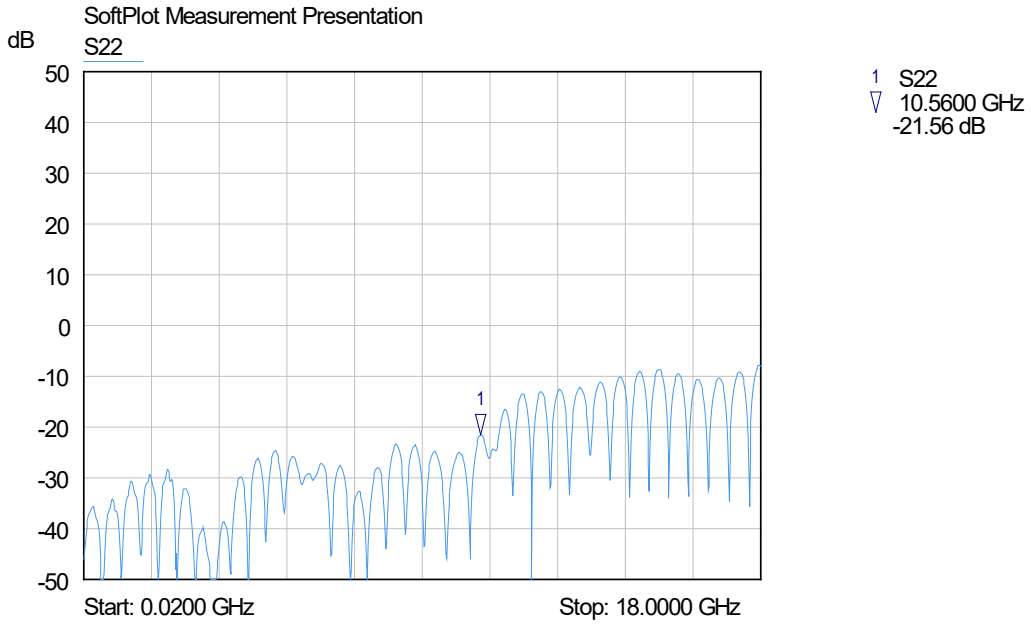
SoftPlot Measurement Presentation
S22
dB
50
40
30
20
10
0
-10
-20
-30
-40
-50
1
Start: 0.0200 GHz
Stop: 18.0000 GHz
1 S22
10.5600 GHz
-21.56 dB