Miniature 6-axis force torque sensor MMS101 Data Sheet

DESCRIPTION

This is a 6-axis force torque sensor which has 3-axis force and 3-axis moment. It has a hybrid structure of a MEMS chip and a metal structure, realizing 6-axis detection. This product has AFE ICs built in its module and produces digital output (SPI). Correction coefficients used for matrix operation (other axis interference components are removed) are stored in memories inside the AFE ICs. Since they can be read out immediately before the measurement start, users do not have to control the sensor and the correction coefficients. Additionally, the LDO built in the module reduces noises. This product is extremely small and light, suitable for fingertips of robot hands.

FEATURES

- Very small：Φ9.6(W) × 9.0(H) mm
- Light weight：3 g
- High load capacity Fx, Fy, Fz：200N / Mx, My, Mz：1.8N･m
- Load rating Fx, Fy, Fz：40N / Mx, My, Mz：0.4N･m

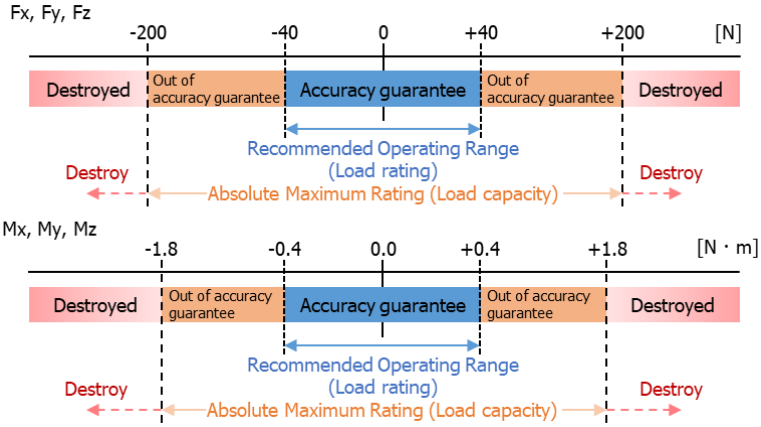

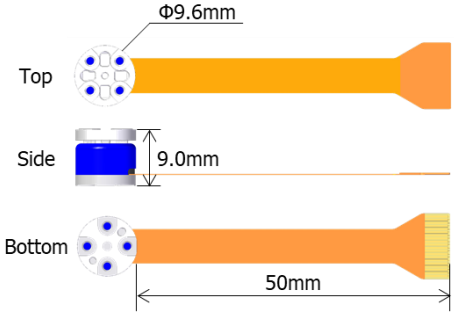

Fig. 1 Product appearance

- Noise reduction by built-in LDO
  Fx, Fy：0.04N RMS / Fz：0.06N RMS
  Mx, My：0.0004N･m RMS / Mz：0.0008N･m RMS
- Digital output of 6-axis data by built-in sequencer (SPI)
- RoHS compliant
- Halogen-contained

SAMPLE MODEL NUMBER

- MMS101-C3S

*Before installing and using this product, please carefully read "PRECAUTIONS FOR SENSOR INSTALLATION" and "PRECAUTIONS FOR SENSOR HANDLE" in this document. Otherwise, incorrect installation may cause damage to this product.

The contents of this document are subject to change without notice.
©2020 Mitsumi co., Ltd. All rights reserved.

INDEX

DESCRIPTION 1
FEATURES 1
SAMPLE MODEL NUMBER 1
BLOCK DIAGRAM 3
PIN CONFIGURATION 4
TERMINAL EXPLANATIONS 5
ABSOLUTE MAXIMUM RATINGS 6
RECOMMENDED OPERATING CONDITIONS 6
Power-on sequence 7
FORCE TORQUE SENSOR CHARACTERISTICS 8
Definition of Force Torque Sensor Characteristics 9
ELECTRICAL CHARACTERISTICS 12
Analog Characteristics 12
Digital I/O Characteristics 12
FUNCTION 13
Operation Description 13
Read of matrix operation correction coefficients 14
Measurement start instruction 15
ADC data acquisition 16
Matrix operation 17
Measurement finish instruction 21
Update of temperature sensor value for offset temperature correction 22
Measurement timing chart 23
COMMAND CODE 25
STATE TRANSITION DIAGRAM 26
SERIAL INTERFACE 27
SPI format 27
SPI AC Characteristics 29
TYPICAL APPLICATION CIRCUIT 30
DIMENSIONS 31
Sensor coordination systems 32
Example of sensor attachment 33
PRECAUTIONS FOR SENSOR INSTALLATION 35
Installation screw 35
Positioning hole 36
Recommended tightening method of sensor installation screw 36
Sensor contact surface 37
PRECAUTIONS FOR SENSOR HANDLE 38
Handling of sensor FPC 38
OPTION 39
Evaluation Kit 39
Conversion Board 42

The contents of this document are subject to change without notice.
©2020 Mitsumi co., Ltd. All rights reserved.

BLOCK DIAGRAM

This product has six AFEs corresponding to each axis. Please switch CSB pin voltage level to access each AFE for operation.

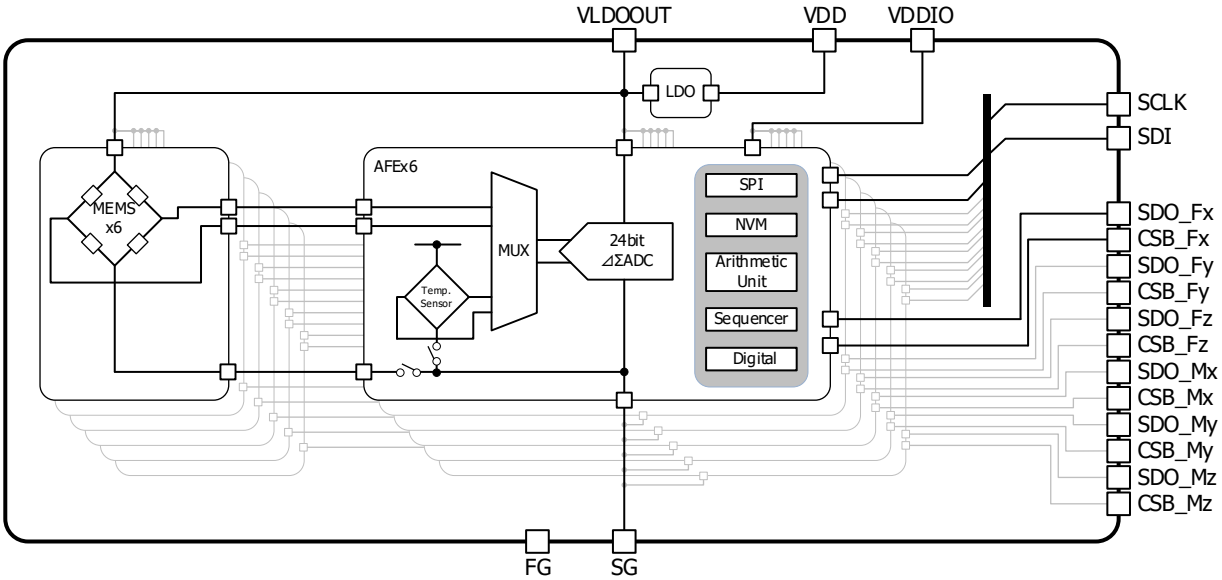

Fig. 2 Block Diagram

The contents of this document are subject to change without notice.
©2020 Mitsumi co., Ltd. All rights reserved.

PIN CONFIGURATION

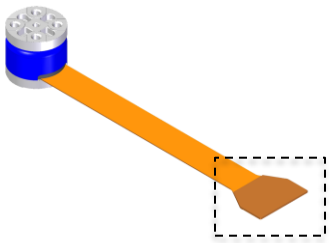

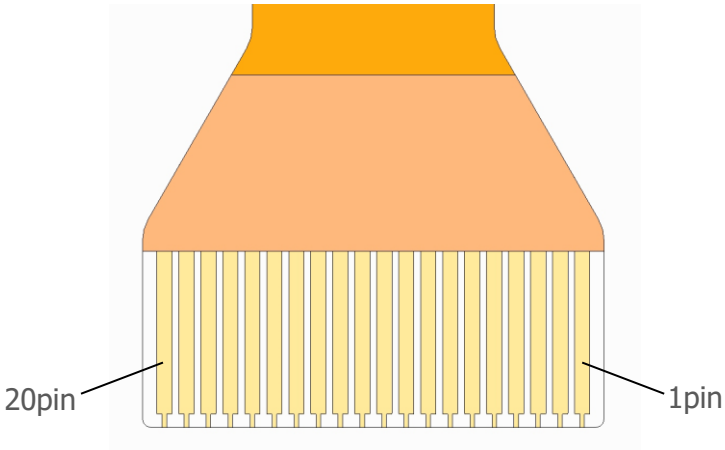

Fig. 3 Pin configuration

*The terminal are located on the back of the FPC.
The above finger is a perspective view.

©2020 Mitsumi co., Ltd. All rights reserved.

TERMINAL EXPLANATIONS

Table 1 Pin table

No.	Pin Name	Type	Function
1	FG	-	Frame ground
2	FG	-	Frame ground
3	CSB_Fz	I	AFE3(Fz) Chip select for SPI communication (negative logic)
4	SDO_Fz	O	AFE3(Fz) Serial Data Output for SPI communication
5	CSB_Mz	I	AFE6(Mz) Chip select for SPI communication (negative logic)
6	SDO_Mz	O	AFE6(Mz) Serial Data Output for SPI communication
7	CSB_Mx	I	AFE4(Mx) Chip select for SPI communication (negative logic)
8	CSB_My	I	AFE5(My) Chip select for SPI communication (negative logic)
9	VDDIO	I	Digital I/O power supply
10	VLDOOUT	O	Built-in LDO output * Not-in-use during normal operation. However, it is recommended to connect a capacitor (10uF) near the sensor connection cable connector on your circuit board for noise reduction.
11	VDD	I	Analog power supply
12	SG	-	Signal ground
13	CSB_Fx	I	AFE1(Fx) Serial Data Output for SPI communication
14	SCLK	I	Serial clock for SPI communication
15	SDO_Fy	O	AFE2(Fy) Serial Data Output for SPI communication
16	SDI	I	Serial Data Input for SPI communication
17	SDO_My	O	AFE5(My) Serial Data Output for SPI communication
18	SDO_Fx	O	AFE1(Fx) Serial Data Output for SPI communication
19	SDO_Mx	O	AFE4(Mx) Serial Data Output for SPI communication
20	CSB_Fy	I	AFE2(Fy) Chip select for SPI communication (negative logic)

The contents of this document are subject to change without notice.
©2020 Mitsumi co., Ltd. All rights reserved.

ABSOLUTE MAXIMUM RATINGS

(unless otherwise specified, Ta = 25℃)

Item	Symbol	Min.	Max.	Unit
Load capacity	F_{MAX}	-200	200	N
	M_{MAX}	-1.8	1.8	N･m
Storage temperature range	T_{STG}	-10	+60	℃
Analog supply voltage	VDD_{MAX}	-0.3	+15	V
Digital I/O voltage	$VDDIO_{MAX}$	-0.3	+4.0	V

RECOMMENDED OPERATING CONDITIONS

(unless otherwise specified, Ta = 25℃)

Item	Symbol	Min.	Max.	Unit
Load rating	F_{OPR}	-40	40	N
	M_{OPR}	-0.4	0.4	N･m
Operating temperature range	T_{OPR}	+5	+45	℃
Analog supply voltage	VDD_{OPR}	+3.8	+14	V
Digital I/O voltage	$VDDIO_{OPR}$	+1.14	+3.6	V

The contents of this document are subject to change without notice.
©2020 Mitsumi co., Ltd. All rights reserved.

Power-on sequence

There is no specification for the power-on sequence of both VDD and VDDIO supplies. When the power is turned on, access the device at least 10msec after both VDD and VDDIO supplies have reached 90% of the applied voltage.

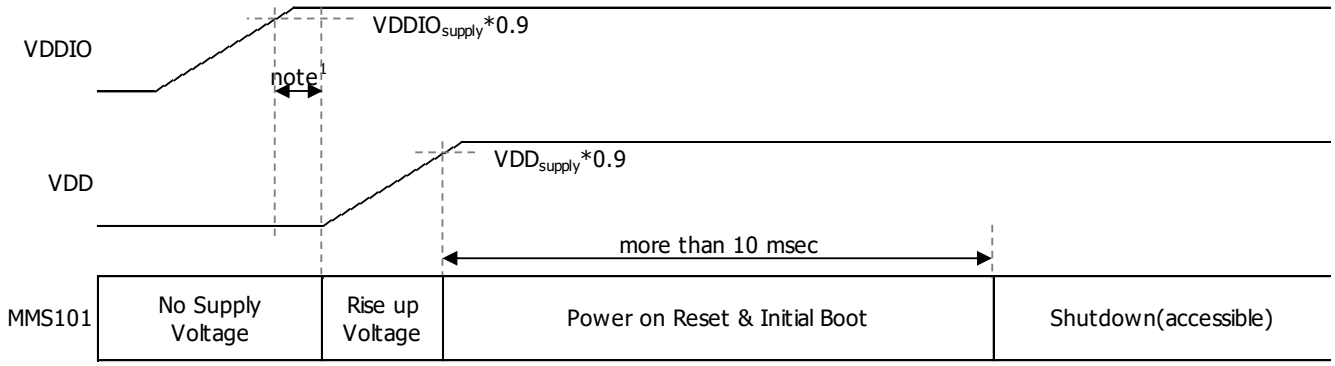

Fig. 4 Power-on sequence

note[1]: No time is specified from starting VDDIO to input VDD. There is no problem even if the power-on sequence of both VDD and VDDIO supplies is reversed.

The contents of this document are subject to change without notice.
©2020 Mitsumi co., Ltd. All rights reserved.

FORCE TORQUE SENSOR CHARACTERISTICS

(unless otherwise specified, Ta = 25℃, VDD = 3.8 to 14 V, VDDIO = 1.14 to 3.6 V)

Item		Symbol	Condition	Min.	Typ.	Max.	Unit.
Theoretical resolution	FxFyFz	F_{RES}	-	-	0.001	-	N
	MxMyMz	M_{RES}	-	-	0.00001	-	N･m
Effective resolution (note[2])	FxFy	F_{Eresxy}	-	-	0.04	-	N RMS
	Fz	F_{Eresz}	-	-	0.06	-	N RMS
	MxMy	M_{Eresxy}	-	-	0.0004	-	N･m RMS
	Mz	M_{Eresz}	-	-	0.0008	-	N･m RMS
Linearity (note[2])		F_L M_L	FS=40N or 0.4N･m	-1.0	-	1.0	%FS
Hysteresis (note[3])		F_{Hys} M_{Hys}	FS=40N or 0.4N･m	-1.0	-	1.0	%FS
Accuracy (note[2])		F_{Acc} M_{Acc}	FS=40N or 0.4N･m	-5.0	-	5.0	%FS
Conversion time (note[3])		t_{con}	-	-	781.25	-	usec
Latency (note[3])		t_{lat}	Conversion time: Typ. Communication clock: 1MHz No delay in switching of AFE to access	-	-	2.0	msec

note[2]: The values in chart are the results of the measurement using our evaluation equipment and board.
note[3]: Design assurance item

The contents of this document are subject to change without notice.
©2020 Mitsumi co., Ltd. All rights reserved.

Definition of Force Torque Sensor Characteristics

- Full Scale FS
  Full-scale FS is 40N or 0.4N･m from zero to the load rating for positive and negative.

- Theoretical resolution
  The value is equivalent to 1LSB of output data.

- Effective resolution
  Standard deviation of 500-point data acquired after measurement is started with no load and the output is stabled.

- Linearity
  Deviation from Reference line connecting the output between no load state and +40N (0.4N･m) applied state or -40 N (0.4N･m) applied state.

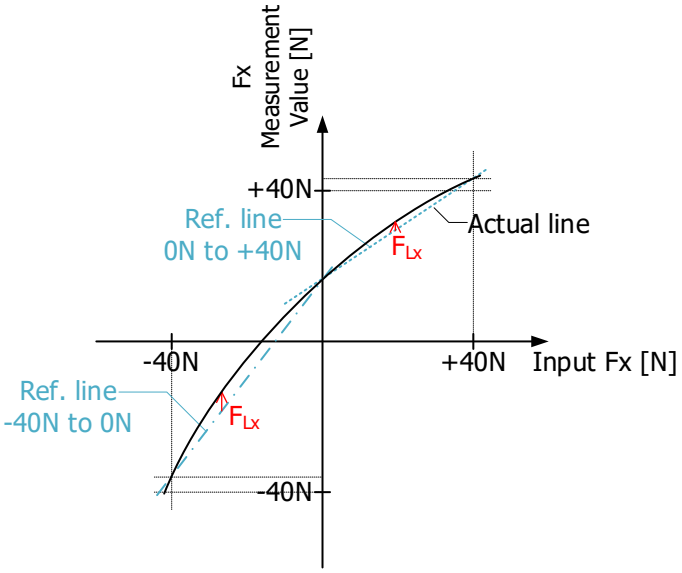

Fig. 5 Linearity (example: Fx)

The contents of this document are subject to change without notice.
©2020 Mitsumi co., Ltd. All rights reserved.

- Hysteresis
  Change amount from the origin after having applied the load ratings (+40N (0.4N･m) or -40N (-0.4N･m)).

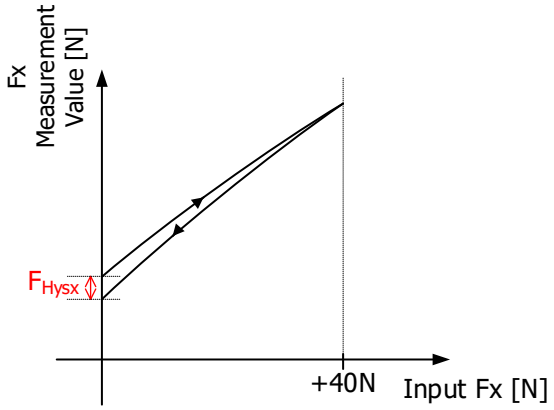

Fig. 6 Hysteresis (example: Fx)

- Accuracy
  Deviation of the applied load and output when a load is applied to the main axis while the offset output in the unloaded state is canceled.

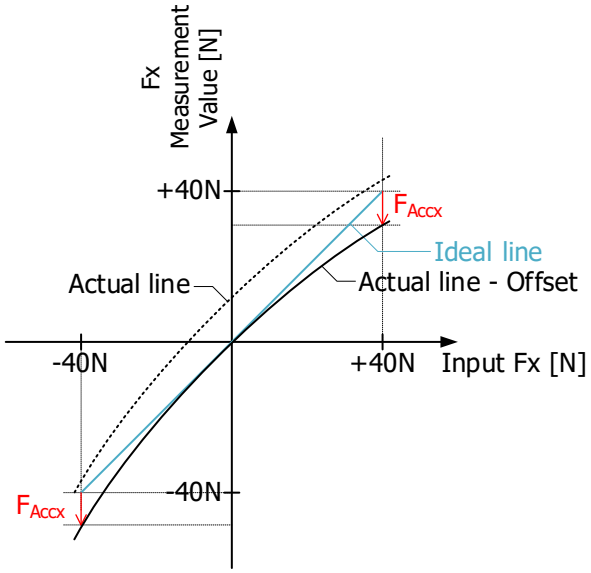

Fig. 7 Accuracy (example: Fx)

The contents of this document are subject to change without notice.
©2020 Mitsumi co., Ltd. All rights reserved.

- Conversion time
  Update interval of ADC data output from each AFE

- Latency
  Delay time from the timing of output data measurement to the timing of matrix operation completion.

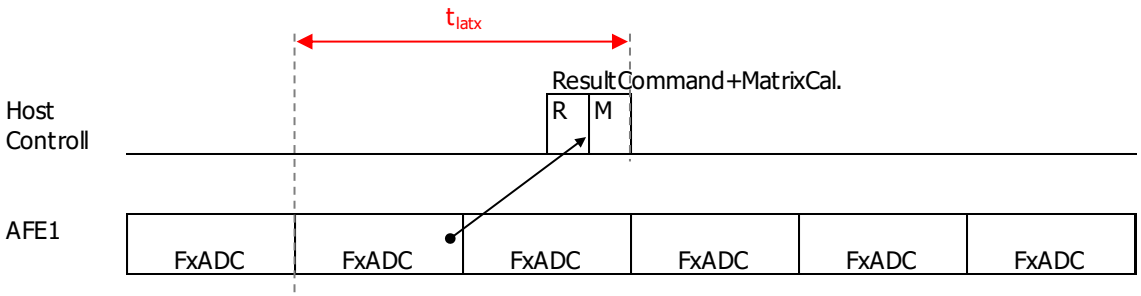

Fig. 8 Latency (example: Fx)

The contents of this document are subject to change without notice.
©2020 Mitsumi co., Ltd. All rights reserved.

ELECTRICAL CHARACTERISTICS

Analog Characteristics

(unless otherwise specified, Ta = 25℃, VDD = 4.3 V, VDDIO = 3.3 V)

Item	Symbol	Condition	Min.	Typ.	Max.	Unit.
VDD Current consumption	I_{VDDact}	Measure active	-	-	10	mA
VDDIO Current consumption	$I_{VDDIOact}$	Measure active	-	-	20	uA

Digital I/O Characteristics

(unless otherwise specified, Ta = 25℃, VDD = 3.8 to 14 V, VDDIO = 1.14 to 3.6 V)

Item	Symbol	Condition	Min.	Typ.	Max.	Unit
High level Input voltage	V_{IH}	-	0.8 × VDDIO	-	VDDIO + 0.3	V
Low level Input voltage	V_{IL}	-	-0.3	-	0.2 × VDDIO	V
Output voltage High level	V_{OH1}	VDDIO ≧ 2.0V, Iload = -3mA	VDDIO - 0.4	-	-	V
	V_{OH2}	VDDIO ＜ 2.0V, Iload = -1mA	0.8 × VDDIO	-	-	V
Output voltage Low level	V_{OL1}	VDDIO ≧ 2.0V, Iload = 3mA	-	-	0.4	V
	V_{OL2}	VDDIO ＜ 2.0V, Iload = 1mA	-	-	0.2 × VDDIO	V

The contents of this document are subject to change without notice.
©2020 Mitsumi co., Ltd. All rights reserved.

FUNCTION

Operation Description

MMS101 can acquire data following the operation flow shown below.

Correction coefficients used in the matrix operation are stored in the memory (NVM: Non-Volatile Memory) built in each AFE. Reading out the correction coefficients before issuance of measurement start instruction allows the matrix operation after ADC data of each axis is acquired.

ADC data offset changes depending on ambient temperature. If needed, temperature sensor values used for offset correction arithmetic done in each AFE should be updated at any timing.

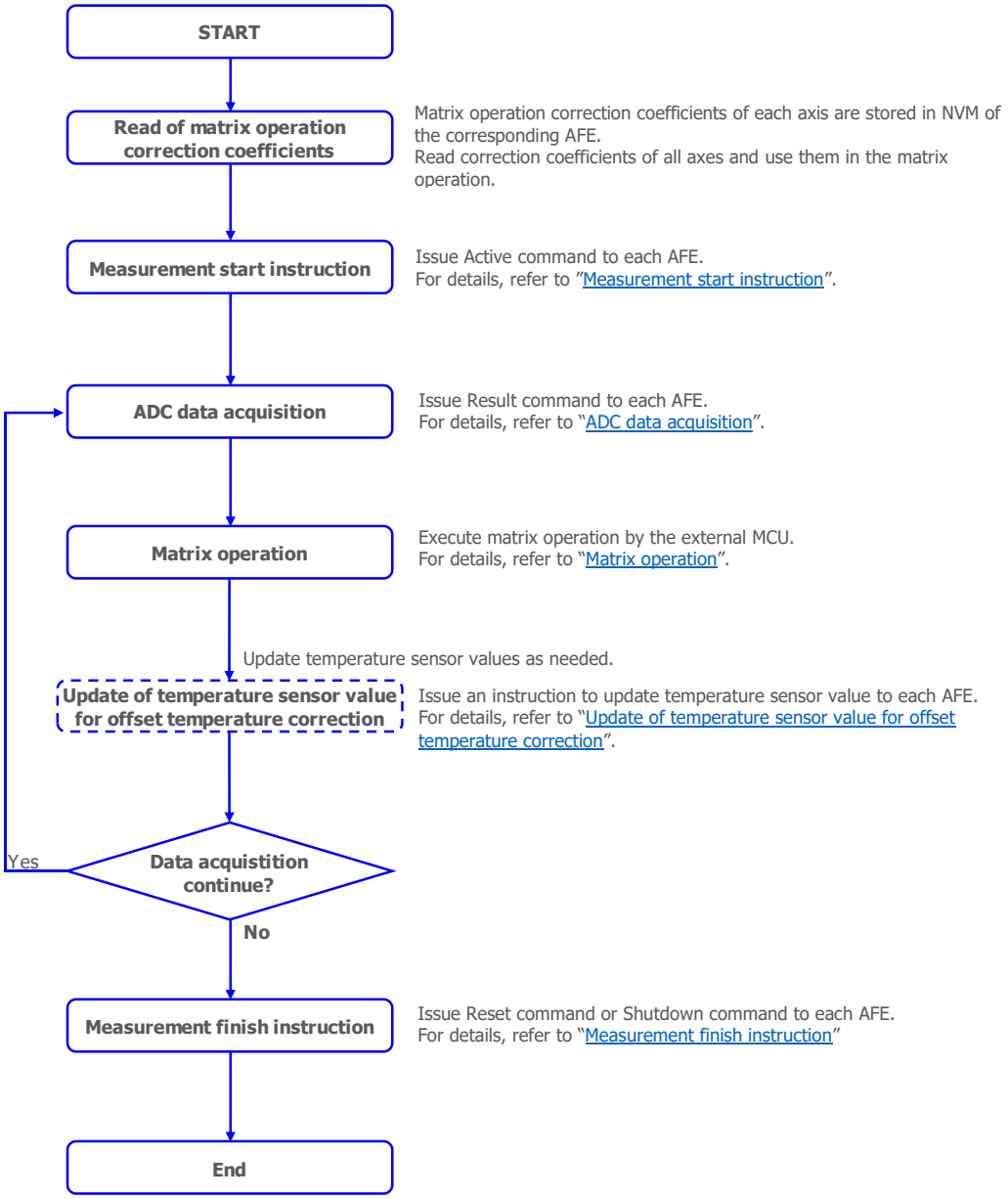

Fig. 9 Operation flow chart

The contents of this document are subject to change without notice.
©2020 Mitsumi co., Ltd. All rights reserved.

Read of matrix operation correction coefficients

Matrix operation correction coefficients are stored in the memory (NVM: Non-Volatile Memory) built in each AFE. Please read the matrix operation correction coefficient 1 to 6 (3 bytes / 24 bits) shown in Table 3 from all AFEs. These coefficients can be read by executing NVM read command. To execute this command, AFEs must be in the Idle state. Therefore, Idle command must be issued and executed in advance. For command code and format, refer to "COMMAND CODE" and "SPI format".

Table 2 NVM map of matrix operation correction coefficients

NVM Addr.		Symbols in Matrix operation formula (note[4])					
		AFE1	AFE2	AFE3	AFE4	AFE5	AFE6
5Ah	MSB	A1	B1	C1	D1	E1	F1
5Bh	Matrix operation correction coefficient 1						
5Ch	LSB						
5Dh	MSB	A2	B2	C2	D2	E2	F2
5Eh	Matrix operation correction coefficient 2						
5Fh	LSB						
60h	MSB	A3	B3	C3	D3	E3	F3
61h	Matrix operation correction coefficient 3						
62h	LSB						
63h-6Bh	For Manufacturer						
6Ch	MSB	A4	B4	C4	D4	E4	F4
6Dh	Matrix operation correction coefficient 4						
6Eh	LSB						
6Fh	MSB	A5	B5	C5	D5	E5	F5
70h	Matrix operation correction coefficient 5						
71h	LSB						
72h	MSB	A6	B6	C6	D6	E6	F6
73h	Matrix operation correction coefficient 6						
74h	LSB						

note[4]: For details of matrix operation formula, refer to "Matrix operation".

The contents of this document are subject to change without notice.
©2020 Mitsumi co., Ltd. All rights reserved.

Measurement start instruction

Each AFE starts AD conversion when receiving Active command. For command code and format, refer to "COMMAND CODE" and "SPI format". Fig. 10 schematically shows an example of AD conversion start instruction issued to AFE1. This instruction must be issued to all AFEs because matrix operation uses ADC data of all axes.

ADC data is subject to offset temperature correction in each AFE. Approximately 7.5 msec is required to complete the first AD conversion because of temperature sensor measurement for offset temperature correction and waiting for filter stabilization. From the second AD conversion, the conversion is repeated at the interval of approximately 0.8 msec because neither the temperature sensor measurement nor waiting for filter stabilization is required.

Drift occurs in Fz (AFE3) immediately after the AD conversion start. In this case, it is recommended that data is acquired after waiting approximately 5 min for stabilization.

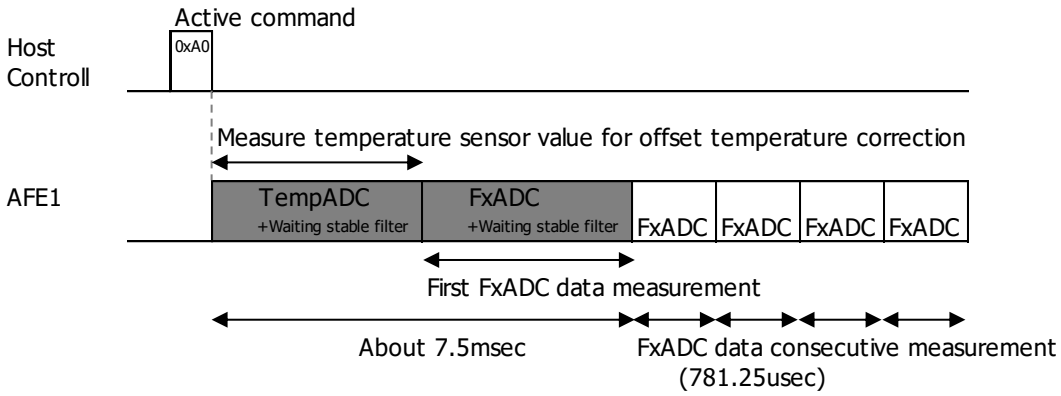

Fig. 10 Schematic of AD conversion start instruction

The second and subsequent ADC data are subject to offset temperature correction using temperature sensor values acquired during the initial AD conversion. This makes correction error larger with changes in ambient temperature, requiring regular update of the temperature sensor values. For update of temperature sensor values, refer to "Update of temperature sensor value for offset temperature correction".

The contents of this document are subject to change without notice.
©2020 Mitsumi co., Ltd. All rights reserved.

ADC data acquisition

To acquire ADC data (3 bytes / 24 bits), Result command should be issued to each AFE. For command code and format, refer to "COMMAND CODE" and "SPI format". Fig. 11 schematically shows an example of ADC data acquisition from AFE1. Result command must be issued to all AFEs to acquire ADC data of all axes because matrix operation uses this data.

Each AFE returns the last AD-converted data when receiving Result command. If Result command is issued during the first AD conversion, ADC data will be 000000 h.

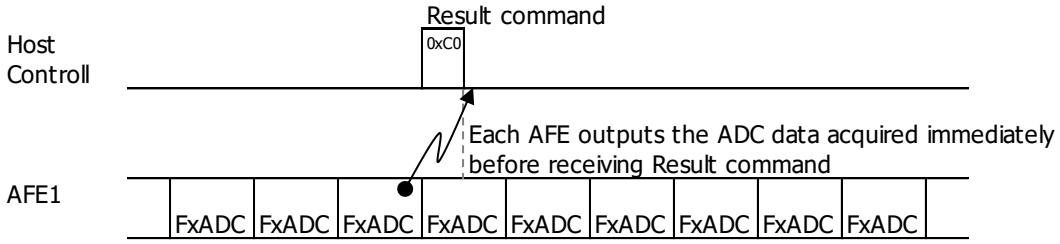

Fig. 11 Schematic of ADC data acquisition

The contents of this document are subject to change without notice.
©2020 Mitsumi co., Ltd. All rights reserved.

Matrix operation

Please execute the matrix operation below by an external MCU, using matrix operation correction coefficients (3 bytes / 24 bits) and ADC data (3 bytes / 24 bits).

Matrix operation formula (note[5])

$$\underbrace{\begin{pmatrix} A1 & A2 & A3 & A4 & A5 & A6 \\ B1 & B2 & B3 & B4 & B5 & B6 \\ C1 & C2 & C3 & C4 & C5 & C6 \\ D1 & D2 & D3 & D4 & D5 & D6 \\ E1 & E2 & E3 & E4 & E5 & E6 \\ F1 & F2 & F3 & F4 & F5 & F6 \end{pmatrix}}_{\text{Matrix operation correction coefficients (3 bytes / 24 bits)}} \underbrace{\begin{pmatrix} FxADC \\ FyADC \\ FzADC \\ MxADC \\ MyADC \\ MzADC \end{pmatrix}}_{\text{ADC data (3 bytes / 24 bits)}} = \underbrace{\begin{pmatrix} FxMD \\ FyMD \\ FzMD \\ MxMD \\ MyMD \\ MzMD \end{pmatrix}}_{\text{Matrix operation data (Input range equal to or less than load capacity => Max. 4 bytes / 32 bits)}}$$

Matrix operation data FxMD to MxMD should be right-shifted by 11 bits to convert the force into 0.001*N and the moment into 0.00001*N･m.

$$\mathrm{Fx} = \mathrm{FxMD} \div 2^{11}\ [0.001{*}\mathrm{N}]$$
$$\mathrm{Fy} = \mathrm{FyMD} \div 2^{11}\ [0.001{*}\mathrm{N}]$$
$$\mathrm{Fz} = \mathrm{FzMD} \div 2^{11}\ [0.001{*}\mathrm{N}]$$
$$\mathrm{Mx} = \mathrm{MxMD} \div 2^{11}\ [0.00001{*}\mathrm{N}\cdot\mathrm{m}]$$
$$\mathrm{My} = \mathrm{MyMD} \div 2^{11}\ [0.00001{*}\mathrm{N}\cdot\mathrm{m}]$$
$$\mathrm{Mz} = \mathrm{MzMD} \div 2^{11}\ [0.00001{*}\mathrm{N}\cdot\mathrm{m}]$$

note[5]: Determinant expansion

$$\mathrm{FxMD} = \mathrm{A1} \times \mathrm{FxADC} + \mathrm{A2} \times \mathrm{FyADC} + \mathrm{A3} \times \mathrm{FzADC} + \mathrm{A4} \times \mathrm{MxADC} + \mathrm{A5} \times \mathrm{MyADC} + \mathrm{A6} \times \mathrm{MzADC}$$
$$\mathrm{FyMD} = \mathrm{B1} \times \mathrm{FxADC} + \mathrm{B2} \times \mathrm{FyADC} + \mathrm{B3} \times \mathrm{FzADC} + \mathrm{B4} \times \mathrm{MxADC} + \mathrm{B5} \times \mathrm{MyADC} + \mathrm{B6} \times \mathrm{MzADC}$$
$$\mathrm{FzMD} = \mathrm{C1} \times \mathrm{FxADC} + \mathrm{C2} \times \mathrm{FyADC} + \mathrm{C3} \times \mathrm{FzADC} + \mathrm{C4} \times \mathrm{MxADC} + \mathrm{C5} \times \mathrm{MyADC} + \mathrm{C6} \times \mathrm{MzADC}$$
$$\mathrm{MxMD} = \mathrm{D1} \times \mathrm{FxADC} + \mathrm{D2} \times \mathrm{FyADC} + \mathrm{D3} \times \mathrm{FzADC} + \mathrm{D4} \times \mathrm{MxADC} + \mathrm{D5} \times \mathrm{MyADC} + \mathrm{D6} \times \mathrm{MzADC}$$
$$\mathrm{MyMD} = \mathrm{E1} \times \mathrm{FxADC} + \mathrm{E2} \times \mathrm{FyADC} + \mathrm{E3} \times \mathrm{FzADC} + \mathrm{E4} \times \mathrm{MxADC} + \mathrm{E5} \times \mathrm{MyADC} + \mathrm{E6} \times \mathrm{MzADC}$$
$$\mathrm{MzMD} = \mathrm{F1} \times \mathrm{FxADC} + \mathrm{F2} \times \mathrm{FyADC} + \mathrm{F3} \times \mathrm{FzADC} + \mathrm{F4} \times \mathrm{MxADC} + \mathrm{F5} \times \mathrm{MyADC} + \mathrm{F6} \times \mathrm{MzADC}$$

The contents of this document are subject to change without notice.
©2020 Mitsumi co., Ltd. All rights reserved.

- Matrix operation correction coefficient (A1 to F6)
  Matrix operation correction coefficient is 3 bytes (24 bits). A negative number is expressed by 2's complement.

Table 3 Example of matrix operation correction coefficient

HEX.	DEC.
800000 h	-8388608
FFFFFF h	-1
000000 h	0
000001 h	1
000800 h	2048
7FFFFF h	8388607

- ADC data (FxADC to MzADC)
  ADC data is 3 bytes (24 bits). A negative number is expressed by 2's complement.

Table 4 Example of ADC data output

HEX.	DEC.
800000 h	-8388608
FF63C0 h	-40000
FFFFFF h	-1
000000 h	0
000001 h	1
009C40 h	40000
7FFFFF h	8388607

The contents of this document are subject to change without notice.
©2020 Mitsumi co., Ltd. All rights reserved.

- Matrix operation data (FxMD to MzMD)

  According to calculations, the range of the matrix operation data is 6 bytes (48 bits). For the data measured at the load capacity or less, the range is 4 bytes (32 bits) at the maximum. The matrix operation data uses negative numbers expressed by 2's complement.

Table 5 Example of matrix operation data – force output

Matrix operation data	Matrix operation data After right-shift by 11 bits		Force [N]
HEX.	HEX.	DEC.	
E7960000 h ~ E79607FF h	FFFCF2C0 h	-200000	-200.000
FB1E0000 h ~ FB1E07FF h	FFFF63C0 h	-40000	-40.000
FFFFF800 h ~ FFFFFFFF h	FFFFFFFF h	-1	-0.001
00000000 h ~ 000007FF h	00000000 h	0	0.000
00000800 h ~ 00000FFF h	00000001 h	1	0.001
04E20000 h ~ 04E207FF h	00009C40 h	40000	40.000
186A07FF h ~ 186A0000 h	00030D40 h	200000	200.000

The contents of this document are subject to change without notice.
©2020 Mitsumi co., Ltd. All rights reserved.

Table 6 Example of matrix operation data - moment output

Matrix operation data	Matrix operation data After right-shift by 11 bits		Moment [N･m]
HEX.	HEX.	DEC.	
EA070000 h ≀ EA0707FF h	FFFD40E0 h	-180000	-1.80000
FB1E0000 h ≀ FB1E07FF h	FFFF63C0 h	-40000	-0.40000
FFFFF800 h ≀ FFFFFFFF h	FFFFFFFF h	-1	-0.00001
00000000 h ≀ 000007FF h	00000000 h	0	0.00000
00000800 h ≀ 00000FFF h	00000001 h	1	0.00001
04E20000 h ≀ 04E207FF h	00009C40 h	40000	0.40000
15F907FF h ≀ 15F90000 h	0002BF20 h	180000	1.80000

The contents of this document are subject to change without notice.
©2020 Mitsumi co., Ltd. All rights reserved.

Measurement finish instruction

Each AFE completes AD conversion and ends measurement when receiving Reset command or Shutdown command. For command code and format, refer to "COMMAND CODE" and "SPI format". Fig. 12 schematically shows an example of measurement finish instruction issued to AFE1. Measurement finish instruction must be issued to all AFEs.

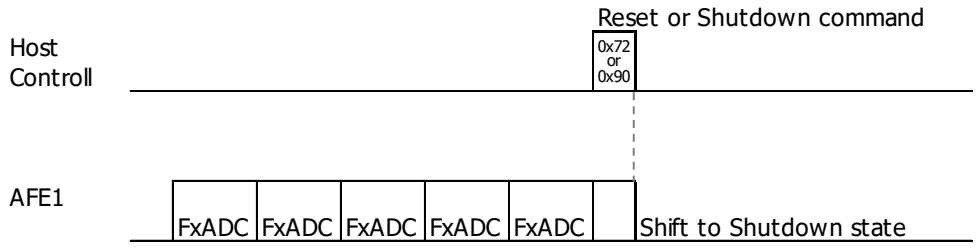

Fig. 12 Schematic of measurement finish instruction

The contents of this document are subject to change without notice.
©2020 Mitsumi co., Ltd. All rights reserved.

Update of temperature sensor value for offset temperature correction

After AD conversion starts, the second and subsequent ADC data are subject to offset temperature correction using temperature sensor values acquired during the first AD conversion. This makes correction error larger with changes in ambient temperature, requiring regular update of the temperature sensor values.

Write Register command is used to update temperature sensor values for offset temperature correction. Fig. 13 schematically shows an example of the update of such data in AFE1. By executing Write Register command and writing data 0x01 to register address 0x3F at any timing, on-going AD conversion is completed, AD conversion of the temperature sensor is done again, and the data is updated. For command code and format, refer to "COMMAND CODE" and "SPI format".

The last ADC data can also be acquired during update of the temperature sensor values.

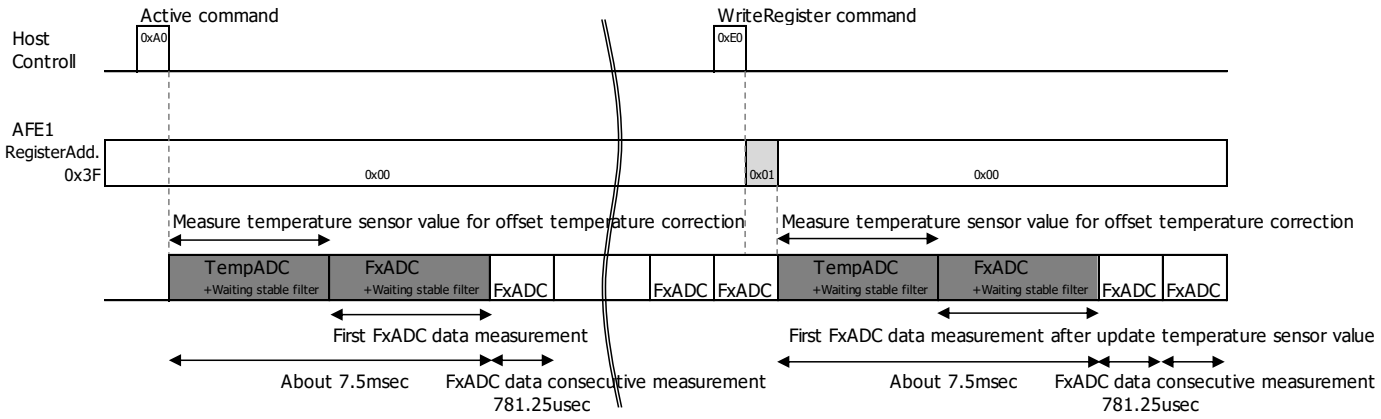

Fig. 13 Schematic of update of temperature sensor values for offset temperature correction

©2020 Mitsumi co., Ltd. All rights reserved.

Measurement timing chart

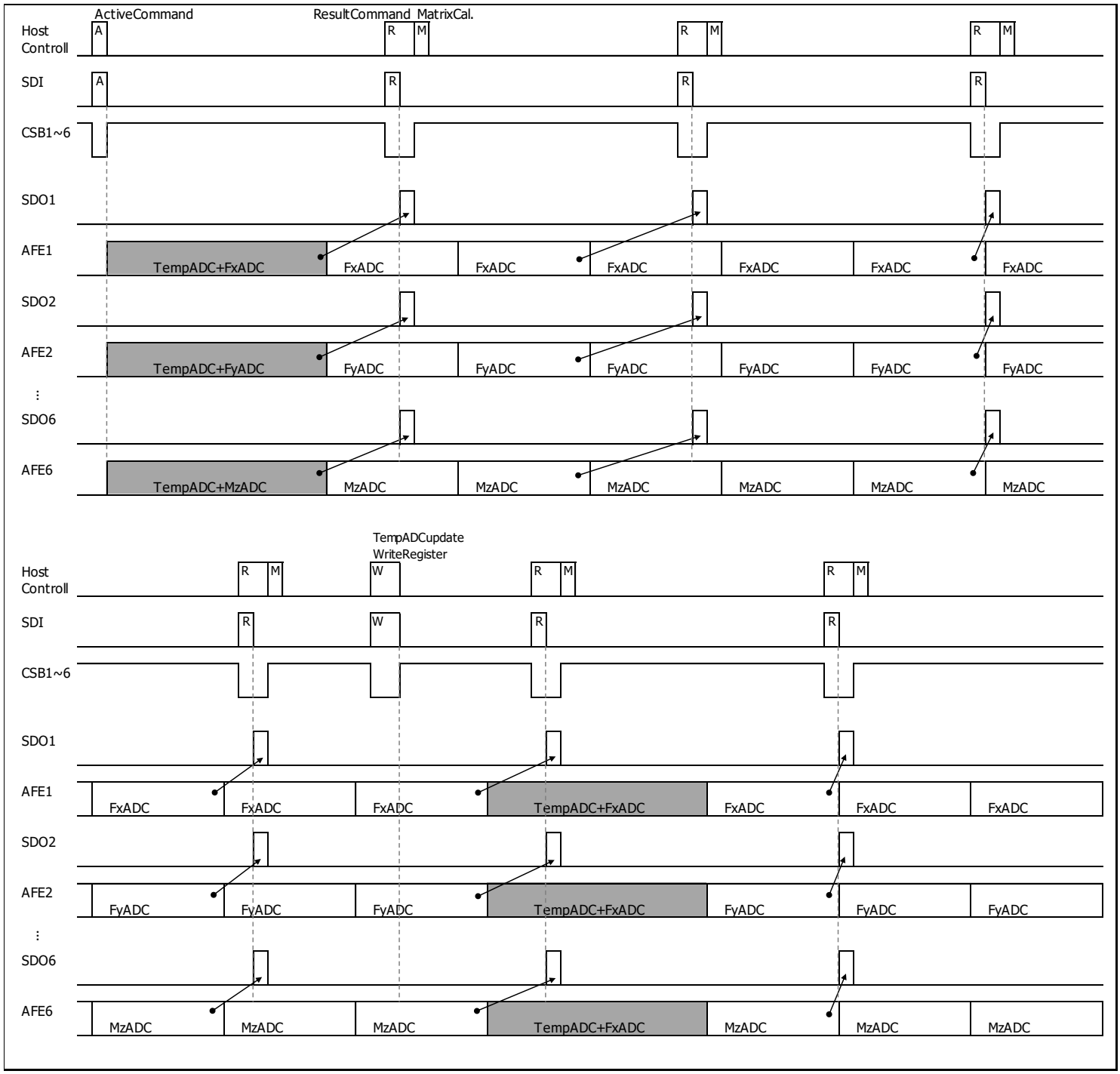

*AD conversion cycle depends on AFE because internal clock is different from each AFE.

Fig. 14 Integrated CSB pin - Measurement timing chart

©2020 Mitsumi co., Ltd. All rights reserved.

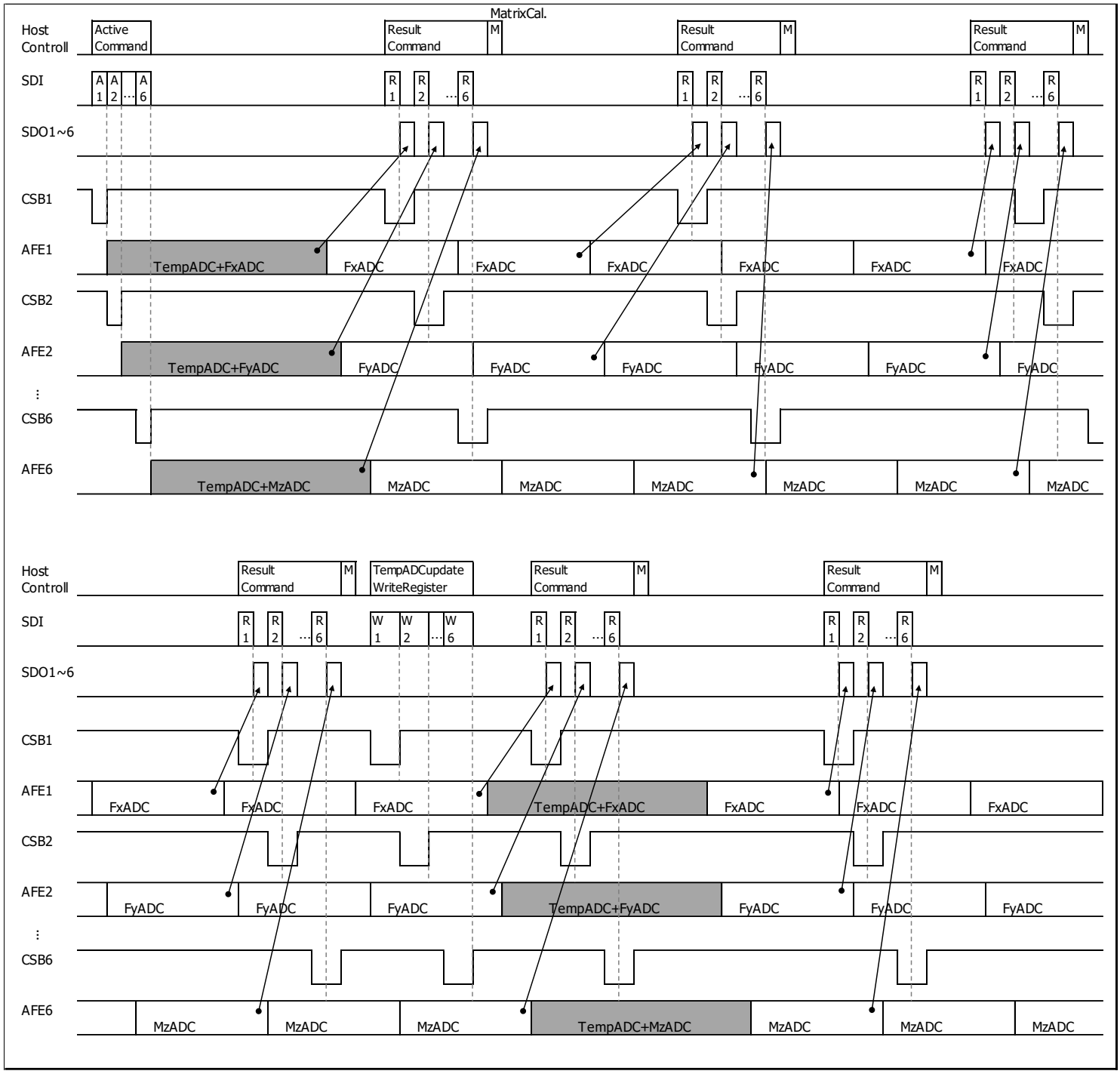

*AD conversion cycle depends on AFE because internal clock is different from each AFE.

Fig. 15 Integrated SDO pin - Measurement timing chart

©2020 Mitsumi co., Ltd. All rights reserved.

COMMAND CODE

Table 7 Command code list

Command Name	Command Code									Format
	HEX.	BIN.								
		C7	C6	C5	C4	C3	C2	C1	C0	
Reset	0x72	0	1	1	1	0	0	1	0	SPI Write format
	Reset and Return to Shutdown state. It becomes busy for the maximum 1.8msec. Operation only with command code.									
Shutdown	0x90	1	0	0	1	0	0	0	0	SPI Write format
	Shift to Shutdown state. Operation only with command code.									
Idle	0x94	1	0	0	1	0	1	0	0	SPI Write format
	Start up the internal circuit and put it in the Idle state. Operation only with command code.									
Active	0xA0	1	0	1	0	0	0	0	0	SPI Write format
	Start AD conversion. Operation only with command code.									
Read ADC Result	0xC0	1	1	0	0	0	0	0	0	SPI Write/Read format
	ADC data (3 bytes /24 bits) is output MSB first. A negative number is expressed by 2's complement. For output range, positive output is 000000 h to 7FFFFF h (0 to +8388607 in decimal number), while negative output is FFFFFF h to 800000 h (-1 to -8388608 in decimal number). However, the measurement data acquired during the usage beyond the recommended operating conditions cannot be guaranteed.									
Read Temperature ADC Result	0xC2	1	1	0	0	0	0	1	0	SPIWrite/Read format
	ADC data (3 bytes /24 bits) is output MSB first. A negative number is expressed by 2's complement. For output range, positive output is 000000 h to 7FFFFF h (0 to +8388607 in decimal number), while negative output is FFFFFF h to 800000 h (-1 to -8388608 in decimal number). However, the measurement data acquired during the usage beyond the recommended operating conditions cannot be guaranteed. Temperature value[℃] = DEC./2^16 Output example									

BIN.	HEX.	DEC.	Temperature
000001010000000000000000 b	050000 h	327680	5.000℃
000110010000000000000000 b	190000 h	1638400	25.000℃
001011010000000000000000 b	2D0000 h	2949120	45.000℃

Command Name	Command Code									Format
Write Register	0xE0	1	1	1	0	0	0	0	0	SPI Write format
	It is used for writing date to resister. After sending command code, send in the order of memory address of 8 bits and write data of 8 bits. After transmitting command code,									
Read NVM	0xD6	1	1	0	1	0	1	1	0	SPI Write/Read format (Busy)
	It is used for reading matrix operation correction coefficients.									

©2020 Mitsumi co., Ltd. All rights reserved.

STATE TRANSITION DIAGRAM

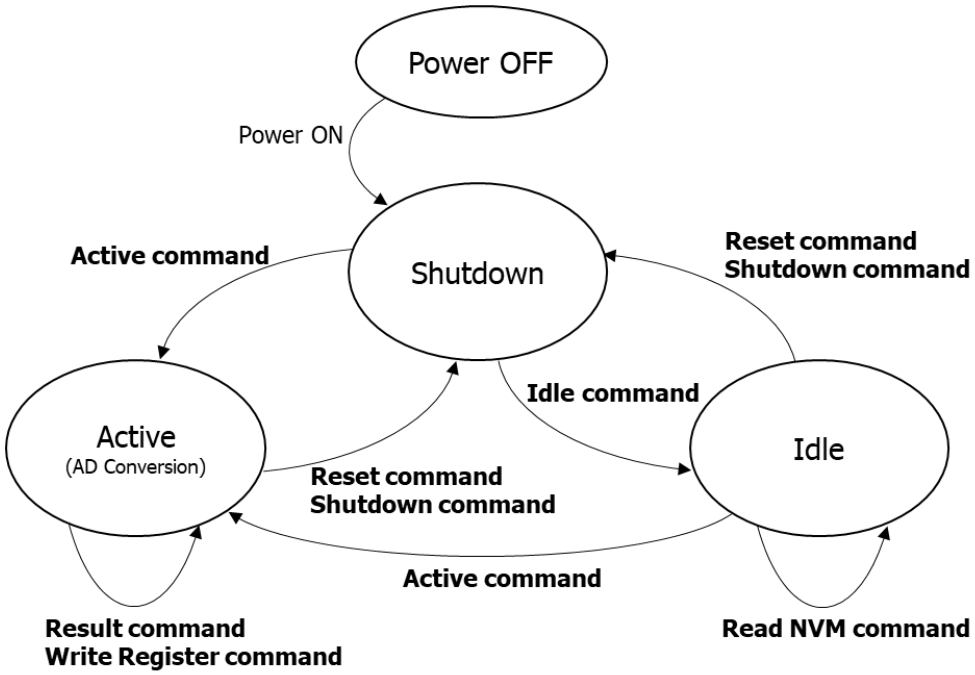

Fig. 16 State transition diagram

Table 8 State transition table

Command \ State	Shutdown	Active	Idle
Reset	Power on Reset & Initial Boot =>Shutdown state	Power on Reset & Initial Boot =>Shutdown state	Power on Reset & Initial Boot =>Shutdown state
Shutdown	=>Keep state	=>Shutdown state	=>Shutdown state
Active	Reset & Boot Load =>Active state (AD conversion)	Ignore(note[6]) =>Keep state	=>Active state (AD conversion)
Result	Ignore(note[6]) =>Keep state	Output result =>Keep state	Do not issue(note[7]) =>Keep state
Idle	Reset & Boot Load =>Idle state	Do not issue(note[8]) =>Idle state	=>Keep state
Write Register	Ignore(note[6]) =>Keep state	Temperature ADC update =>Keep state	Do not issue(note[9]) =>Keep state
Read NVM	Ignore(note[6]) =>Keep state	Do not issue(note[8]) =>Keep state	Output Matrix coeff. =>Keep state

note[6]: NACK is returned to the command.
note[7]: The correct result is not output. Additionally, ACK is returned to the command.
note[8]: Although command is acceptable, it goes unintended behavior since sequence is running.
note[9]: Although command is acceptable, it goes unintended behavior during sequence execution.

©2020 Mitsumi co., Ltd. All rights reserved.

SERIAL INTERFACE

It supports SPI as an interface for serial communication.

Table 9 Baud rate

Items	Symbol	Condition	Min.	Typ.	Max.	Unit.
SPI communication speed	BR_{SPI1}	VDDIO ≧ 2.0V Cb ≦ 100pF	-	-	5.0	Mbps
	BR_{SPI2}	VDDIO < 2.0V Cb < 100pF	-	-	1.0	
	BR_{SPI3}	VDDIO ≧ 2.0V Cb ≦ 400pF	-	-	2.5	
	BR_{SPI4}	VDDIO < 2.0V Cb < 100pF	-	-	0.5	

SPI format

The basic format of SPI is shown below. The relationship between clock(SCLK)and data(SDI/SDO)is Mode3.Data send/receive is started when CSB becomes low level from the status when SCLK is high level. Data is updated on falling edges of the SCLK, and sampled on rising edges of the SCLK. Data send/receive is ended when CSB becomes high level from the status when SCLK is high level.

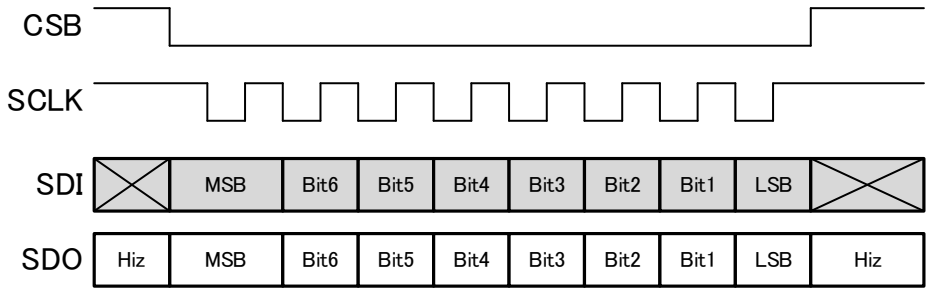

Fig. 17 SPI Waveform

SPI Write format

Please send command code of 8 bits. When the command is received, it turns over ACK to 8 bits. If there is data, please continue sending.

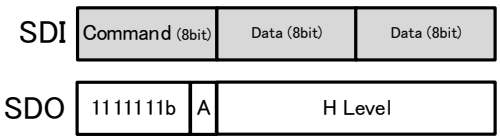

Fig. 18 SPI Write format

The contents of this document are subject to change without notice.
©2020 Mitsumi co., Ltd. All rights reserved.

SPI Write/Read format

Please send command code of 8 bits. When the command is received, it turns over ACK to 8 bits and it outputs the data MSB first.

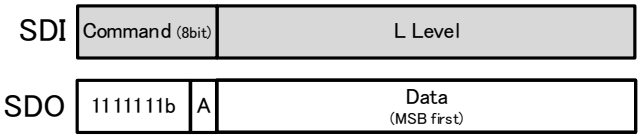

Fig. 19 SPI Write/Read format

SPI Write/Read format (Busy)

Please send command code of 8 bits. When their commands are received, it turns over ACK to 8 bits. Then, please send memory address of 8 bits. After receiving the memory address, the internal area becomes busy for 25usec at the maximum in order to prepare for data transmission. During this time, it returns 0x00 which indicates busy state. When data preparation is completed, it outputs 0x01, followed by data of 8 bits.

How to discern busy state:

Please continue clock input in the same communication status after transmitting the write data. Then, it returns 0x00 which indicates busy status. It returns 0x01 when writing is completed.

* 0x00 to indicate busy may sometimes be output or not depending on the clock frequency.

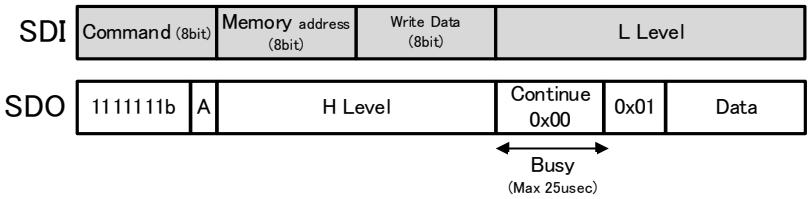

Fig. 20 SPI Write/Read format (Busy)

SPI ACK

When command code which is send in each SPI format is received, it outputs L level to 8 bits as ACK. If command code is not accepted or command code is not valid, it outputs H level to 8 bits as NACK.

©2020 Mitsumi co., Ltd. All rights reserved.

SPI AC Characteristics

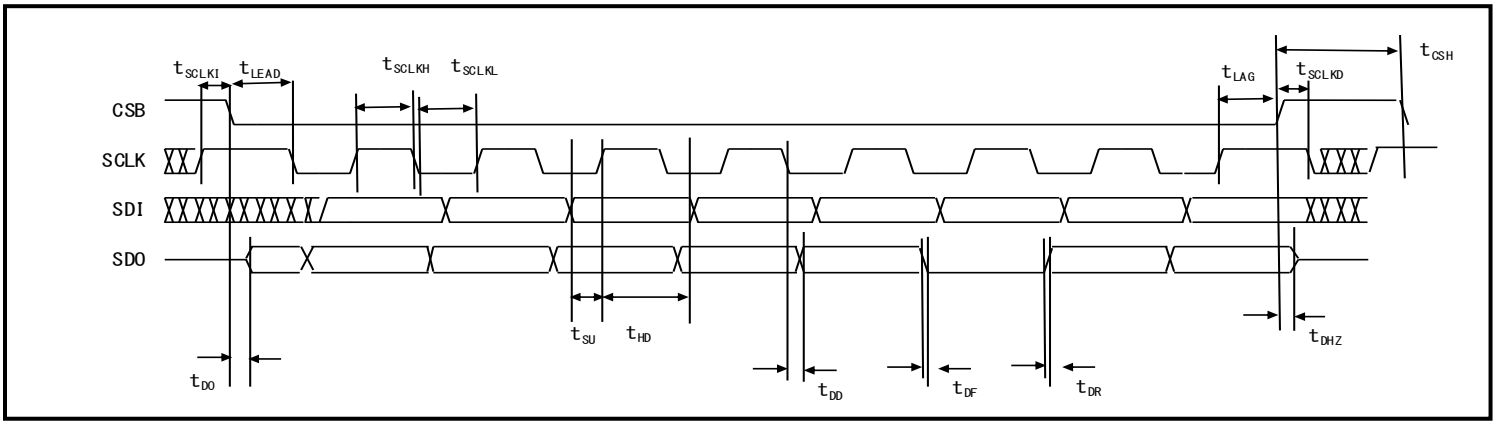

Fig. 21 SPI AC timing chart

Table 10 SPI AC Characteristics

Items	Symbol	VDDIO<2V		VDDIO≧2V		Unit.
		min.	max.	min.	max.	
SCLK frequency（Duty 50±10%）	f_{SCLK}	-	1	-	5	MHz
SCLK High period（90%～90%）	t_{SCLKH}	400	-	80	-	ns
SCLK Low period（10%～10%）	t_{SCLKL}	400	-	80	-	ns
SCLK wait time	t_{SCLKI}	500	-	100	-	ns
SCLK Delay time	t_{SCLKD}	0	-	0	-	ns
CSB High period（90%～90%）	t_{CSH}	1000	-	200	-	ns
Time from CSB falling to SCLK falling	t_{LEAD}	0	-	0	-	ns
Time from SCLK rising to CSB rising	t_{LAG}	500	-	100	-	ns
SDI setup time	t_{SU}	100	-	10	-	ns
SDI hold time	t_{HD}	10	-	10	-	ns
SDO rise time（Load 100pF）（10%～90%）	t_{DR}	-	50	-	50	ns
SDO fall time（Load 100pF）（10%～90%）	t_{DF}	-	50	-	50	ns
SDO output delay time（Load 100pF）	t_{DD}	-	120	-	60	ns
SDO output delay time from CSB falling（Load 100pF）	t_{DO}	-	120	-	60	ns
Time from CSB rising to SDO output HiZ（Load 100pF）	t_{DHZ}	-	170	-	170	ns

The contents of this document are subject to change without notice.
©2020 Mitsumi co., Ltd. All rights reserved.

TYPICAL APPLICATION CIRCUIT

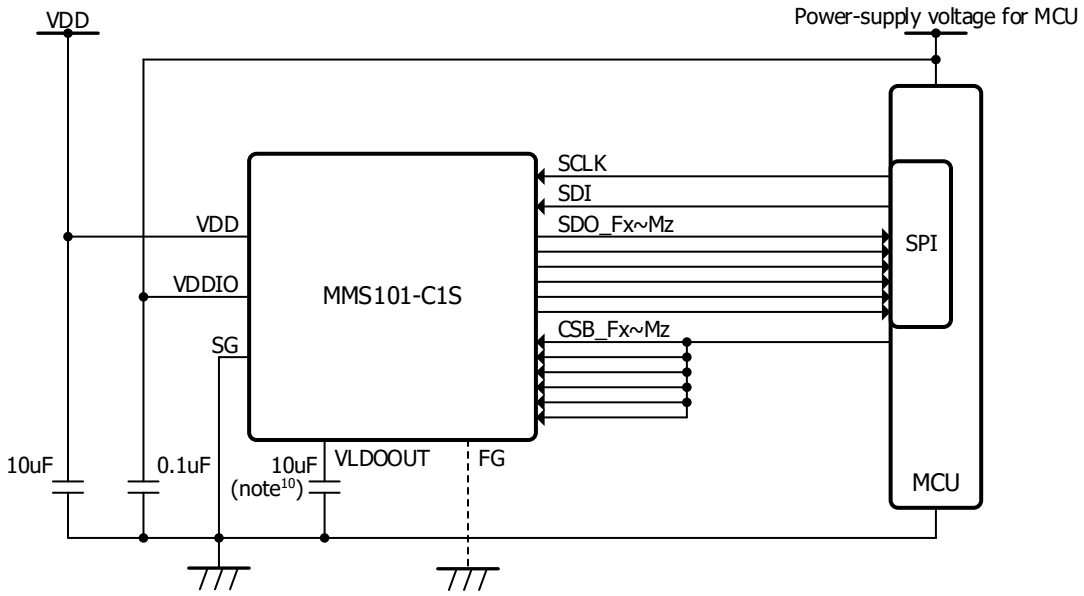

Fig. 22 Integrated CSB pin – Example application circuit

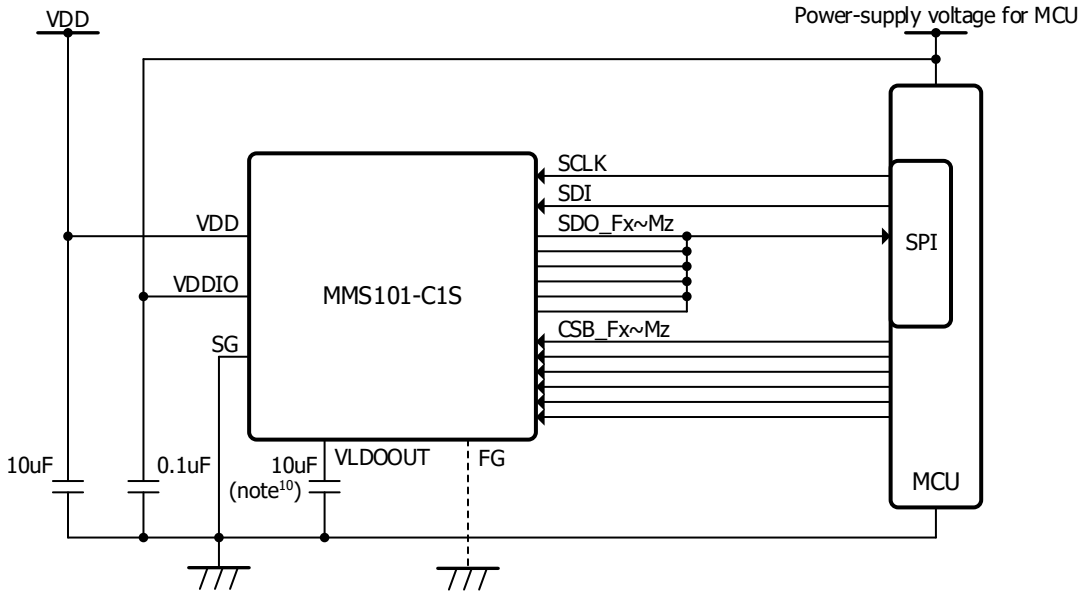

Fig. 23 Integrated SDO pin – Example application circuit

note[10] : It is recommended to be placed as close as possible for noise reduction.

The contents of this document are subject to change without notice.
©2020 Mitsumi co., Ltd. All rights reserved.

DIMENSIONS

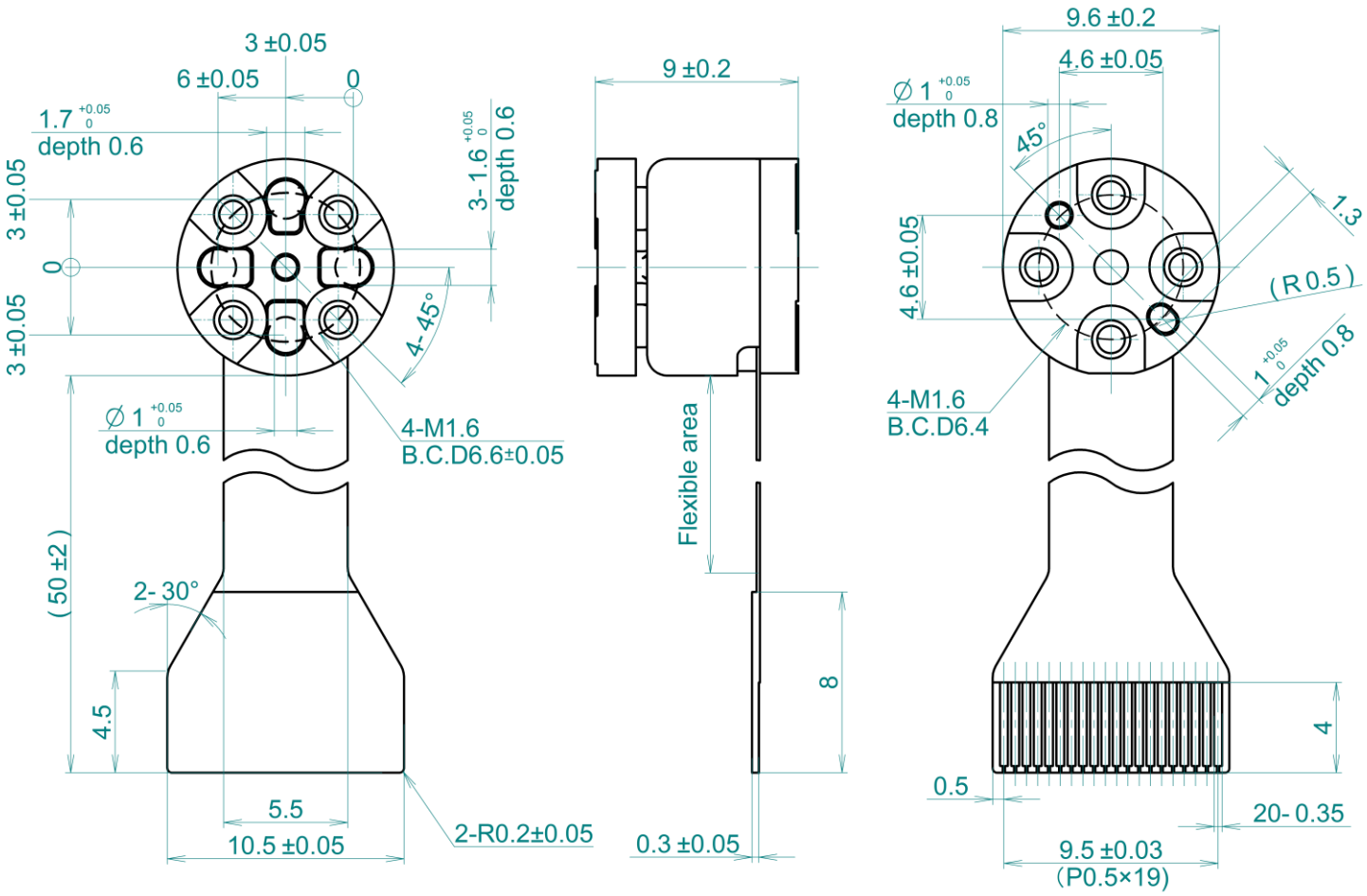

Fig. 24 Dimensions

■ Recommended FPC connector
- FH52K-20S-0.5SH (HIROSE ELECTRIC CO.,LTD)
- FH28D-20S-0.5SH (HIROSE ELECTRIC CO.,LTD)
- 046288020600846+ (KYOCERA Corporation)

The contents of this document are subject to change without notice.
©2020 Mitsumi co., Ltd. All rights reserved.

Sensor coordination systems

*The origin is the sensor top surface center.

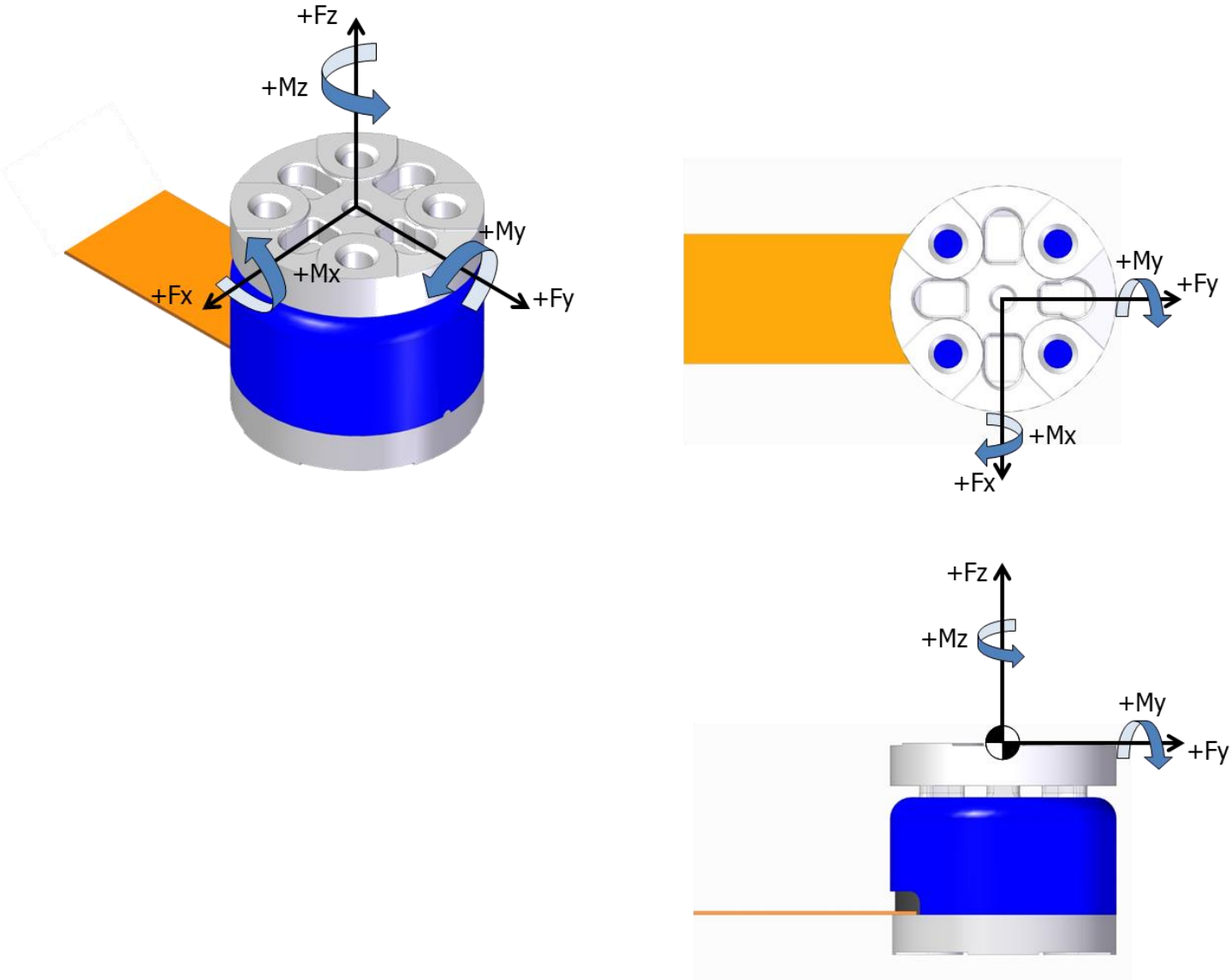

Fig. 25 Sensor coordination systems

The contents of this document are subject to change without notice.
©2020 Mitsumi co., Ltd. All rights reserved.

Example of sensor attachment

It is important to minimize the attachment deformation during load application not to affect the sensor output. Therefore, the attachment should be designed to be hardly deformed by the load assumed in the normal use, using highly rigid materials such as SUS.

Fig. 26, 27 and 28 show examples of top & bottom side shape and installation of the attachment.

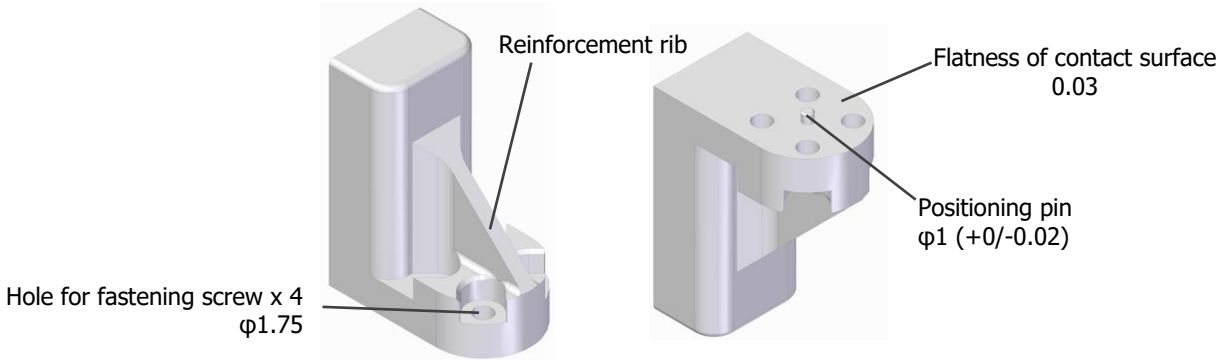

Fig. 26 Example of top side attachment

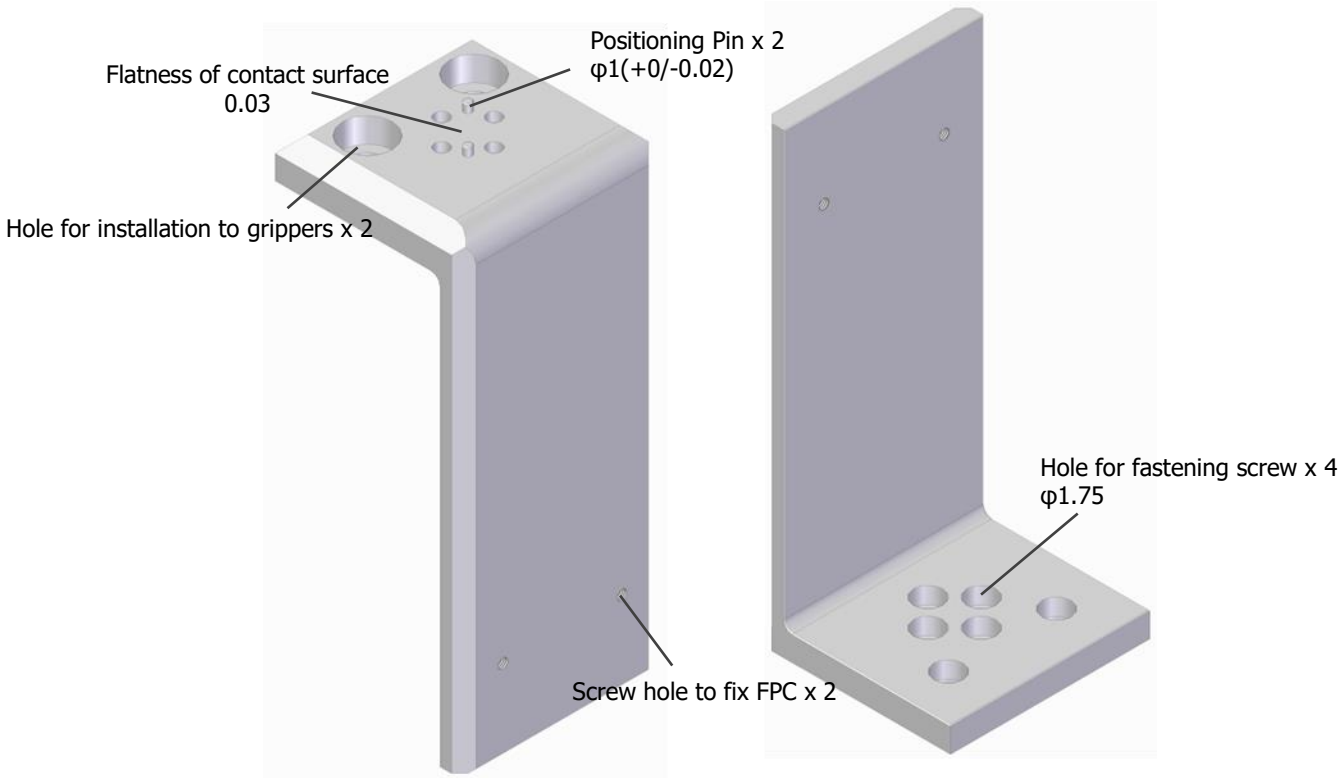

Fig. 27 Example of bottom side attachment

The contents of this document are subject to change without notice.
©2020 Mitsumi co., Ltd. All rights reserved.

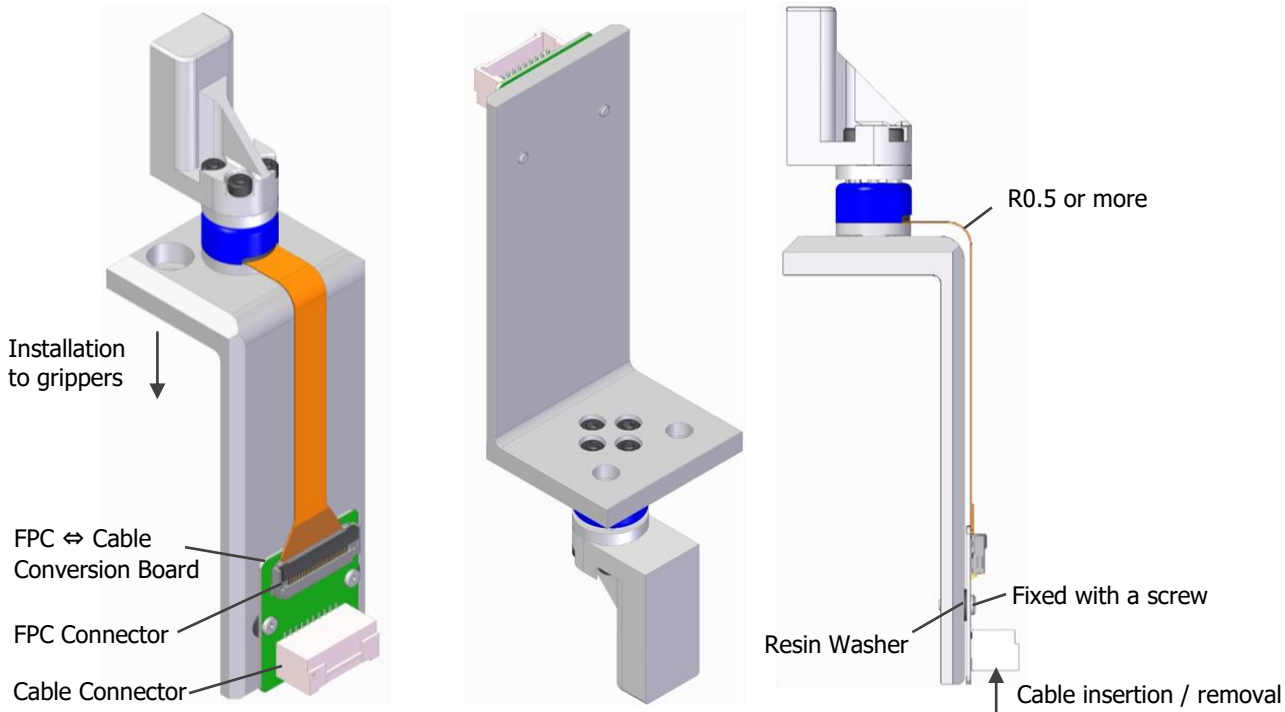

Fig. 28 Example of attachment installation

It is recommended to fix the board connected to FPC to the attachment with a screw so that the FPC is not bent repeatedly. Additionally, cables should be inserted and removed with the FPC fixed to the attachment with a screw to minimize load to the FPC.

Fig. 26, 27 and 28 show examples. The attachment should be designed depending on the intended use.

The contents of this document are subject to change without notice.
©2020 Mitsumi co., Ltd. All rights reserved.

PRECAUTIONS FOR SENSOR INSTALLATION

This product is a precision measuring instrument. Therefore, it needs to be installed following the appropriate procedure to avoid overload to it. Failure to observe the recommendations included in this manual may cause damage to the sensor.

Installation screw

Four M1.6 screws should be used for installation on both top and bottom surfaces. **Length of the screws inserted in the installation holes of both surfaces should be 1.7 mm or shorter.** The tapped holes are 1.8 mm (min. 1.7 mm) through holes. Inserting a screw over 1.7 mm long could damage parts in the sensor.

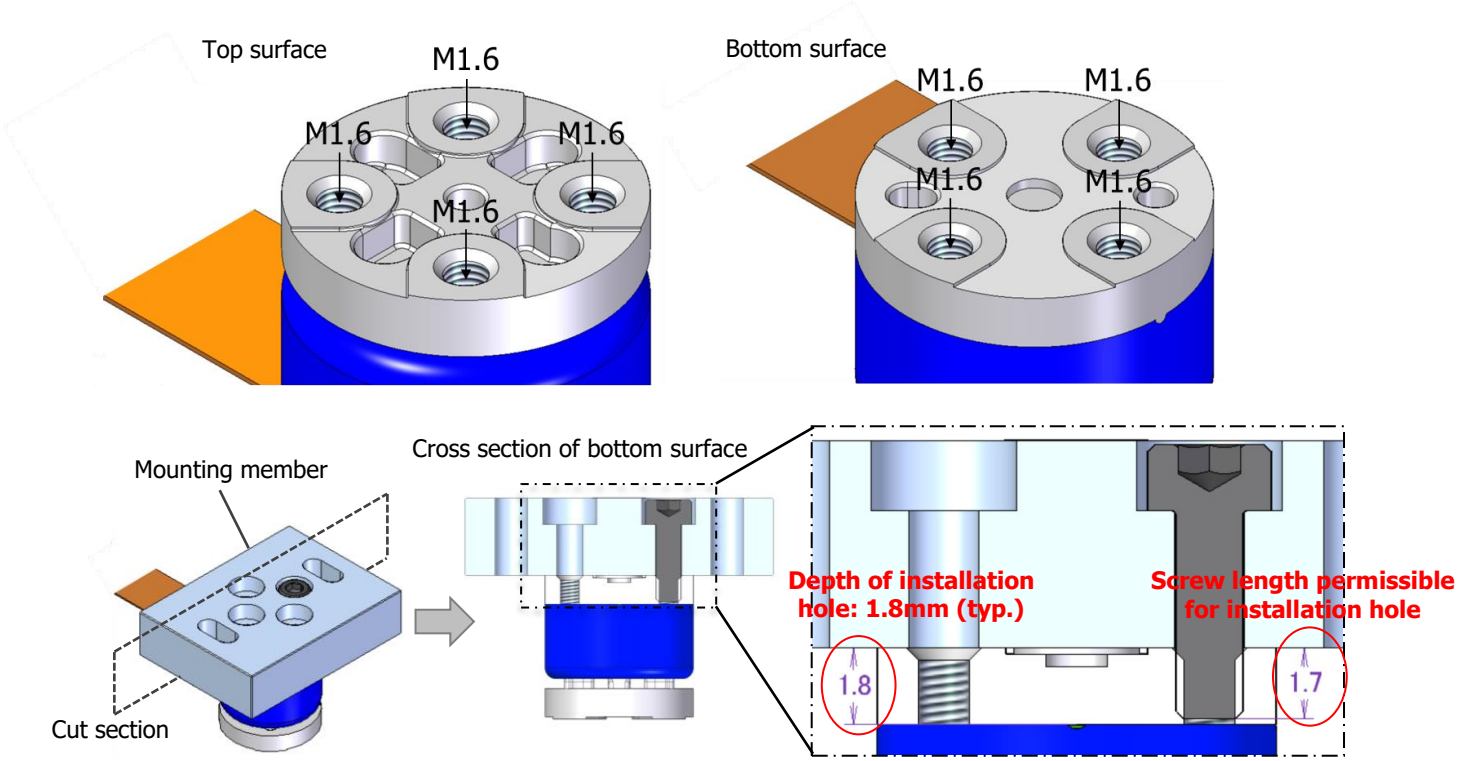

Fig. 29 Precautions for instllation screw

The contents of this document are subject to change without notice.
©2020 Mitsumi co., Ltd. All rights reserved.

Positioning hole

For the top surface, a φ1 round hole in the middle, a φ1.7 round hole, or 1.6 x 1.45 mm square holes can be used for positioning. For the bottom surface, a φ1 round hole and a φ1 slotted hole can be used for positioning. For details, refer to "DIMENSIONS".

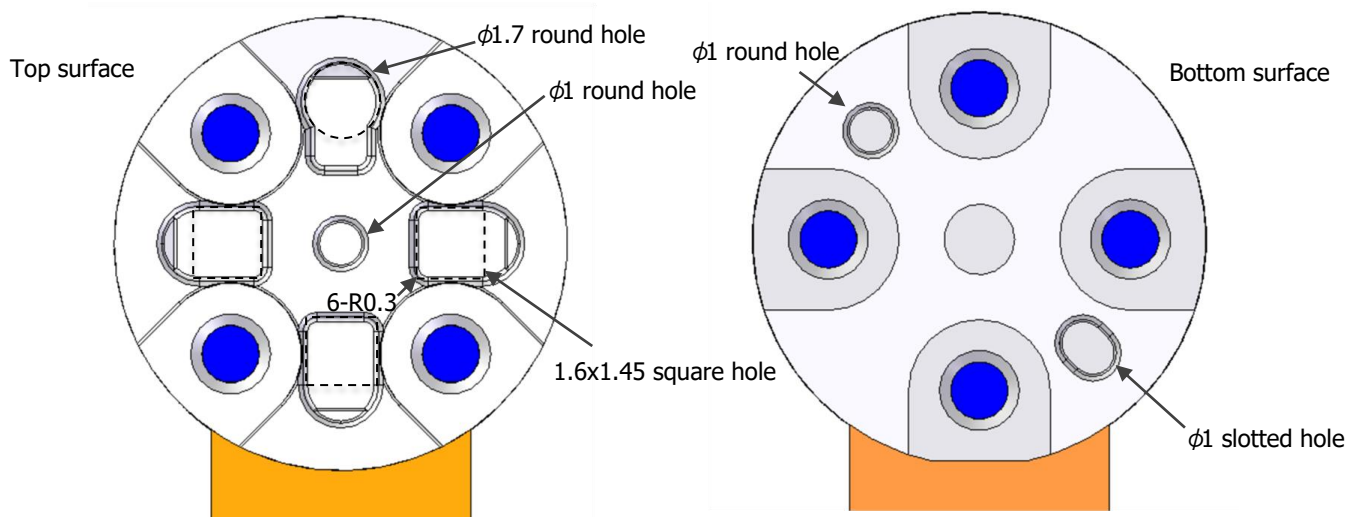

Fig. 30 Positioning holes

Recommended tightening method of sensor installation screw

The recommended tightening torque is 0.15N･m for M1.6 screws used to install this sensor. **DO NOT fasten one screw tightly at first step**, or the sensor may detect incorrect force and moment. In the worst case, the sensor could be damaged.

Screws must be fastened in the diagonal order as shown below. **First, they should be lightly fastened, and then, fastened in more than 2 steps with the recommended tightening torque.**

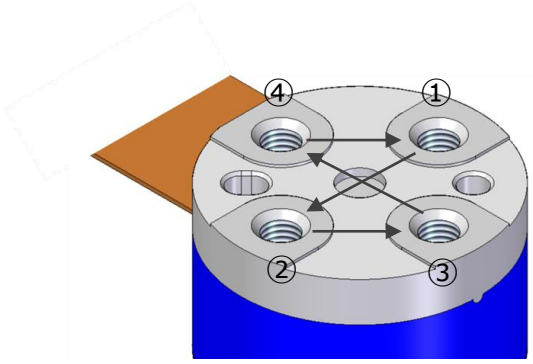

Ex. 1st round ①0.05N･m → ②0.05N･m → ③0.05N･m → ④0.05N･m
2nd round ①0.15N･m → ②0.15N･m → ③0.15N･m → ④0.15N･m

Fig. 31 Example of screw tightening order

©2020 Mitsumi co., Ltd. All rights reserved.

Sensor contact surface

Flatness of the sensor side contact surface is 0.03mm, and the installation side contact surface should be designed at the same flatness. Level difference resulting from poor flatness could cause the force and the moment to be detected incorrectly. In the worst case, the sensor could be damaged. The installation side contact surface needs to be rigid enough against loads.

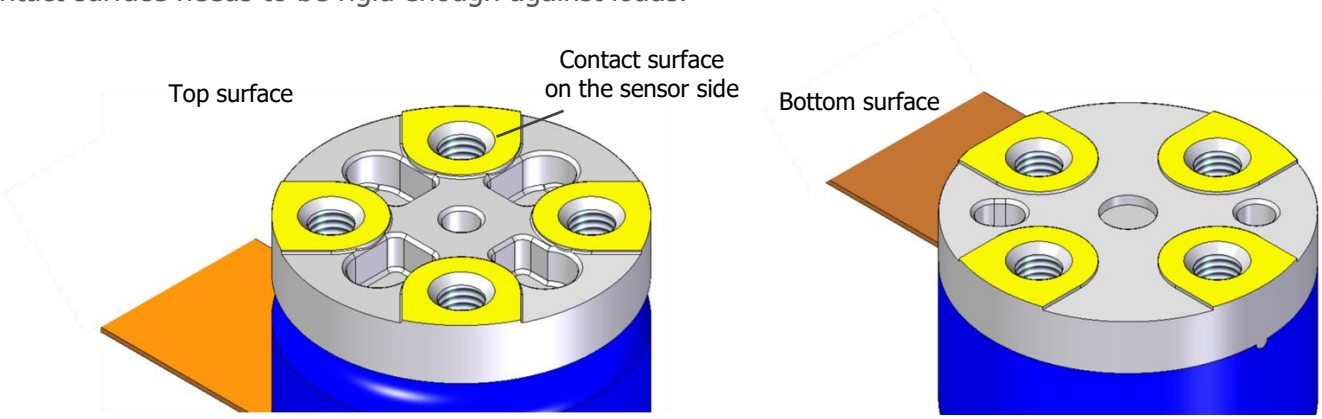

Fig. 32 Sensor side contact surface

The contents of this document are subject to change without notice.
©2020 Mitsumi co., Ltd. All rights reserved.

PRECAUTIONS FOR SENSOR HANDLE

This product is a precision measuring instrument. Therefore, it needs to be handled following the appropriate procedure to avoid overload to it. Failure to observe the recommendations included in this manual may cause damage to the sensor.

Handling of sensor FPC

The FPC must NOT be strongly pulled in a lateral or the upper direction while the sensor body is fixed with screws. Otherwise, load is applied to the base of the FPC, and the wiring on the FPC might be snapped.

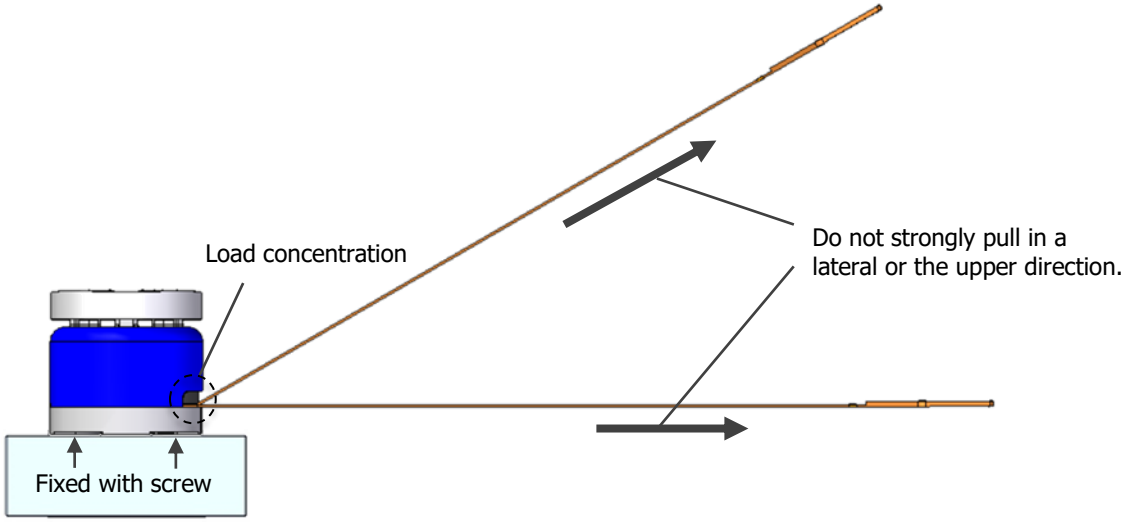

Fig. 33 Precaution for handling of sensor FPC - 1

In the FPC termination part, a level difference exists between the FPC and the reinforcing plate. Bending the FPC at this level difference part could cut the wiring on the FPC.

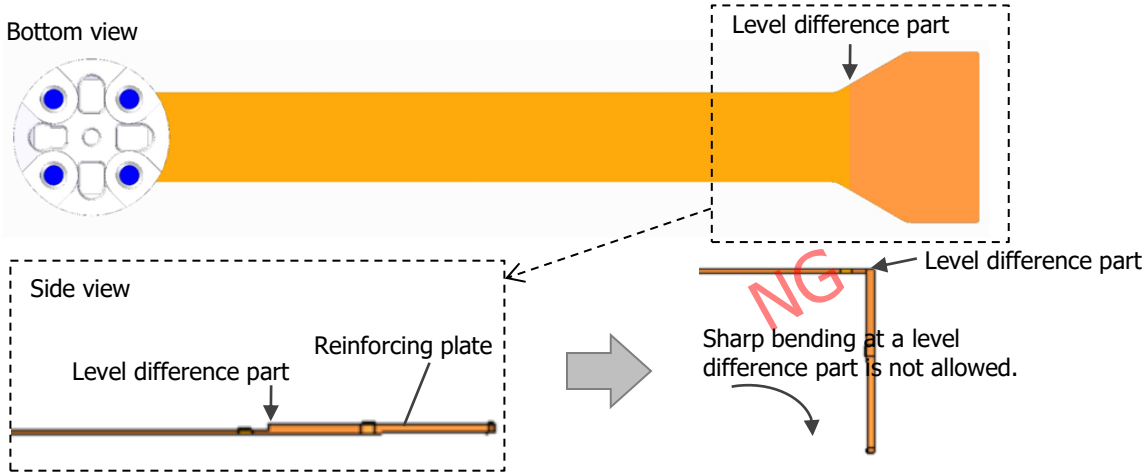

Fig. 34 Precaution for handling of sensor FPC - 2

©2020 Mitsumi co., Ltd. All rights reserved.

OPTION

As options, evaluation kit and conversion board are available. Please order if necessary. However, the options are guaranteed only for checking the operation at the time of shipment, and will only be provided for sample support. Please note.

Evaluation Kit

Using evaluation kit with PC applications allows logging data to be acquired. In addition to product to which conversion board for evaluation kit are connected, they consist of cables and evaluation board. There are two kinds of evaluation kits. Select them according to the application.

Table 11 Evaluation Kit line-up

Evaluation Kit Name	Constitution
Evaluation Kit 1 (Ver.2 Rev.0)	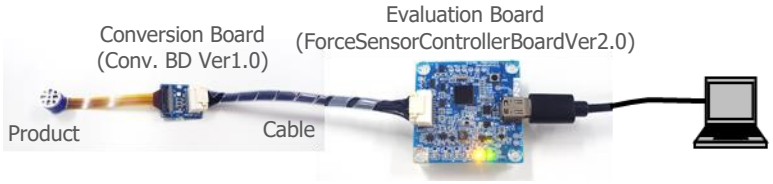 *External communication: USB *USB cable is not included. ・Required Spec. USB cable：USB ver.2.0/Type-C ◆Document: Instruction Manual of ForceSensorController_Rev.6.pdf ◆App.: ForceSensor_EvaluationProgram_ver.2.0.0.5.zip
Evaluation Kit 5 (Ver.1 E Rev.0)	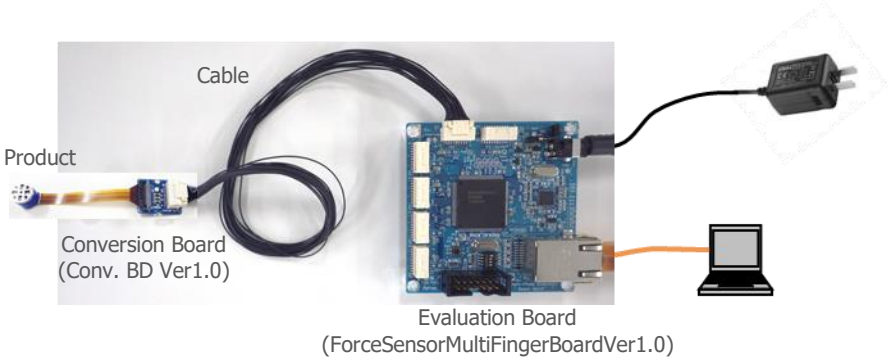 *External communication: Ethernet *Ethernet cable and AC adaptor are not included. ・Required Spec. Ethernet cable :Cat5e or higher/ RJ-45 Plug ・Required Spec. AC adaptor: Output DC voltage 5V/ Output current capacity 0.5A or more/ Plug No. PL04B *Max. 5 sampled connectable ◆Document: Instruction Manual of ForceSensorMultiFingerBoardVer1.0 Evaluation Kit_Rev.5.pdf ◆App.: ForceSensorMultiFingerEvaluationProgram_ver.1.0.0.2.zip

The contents of this document are subject to change without notice.
©2020 Mitsumi co., Ltd. All rights reserved.

Cable

Table 12 Cable line-up

Cable Type	Cable length	Cable appearance
Lead cable	15, 30cm	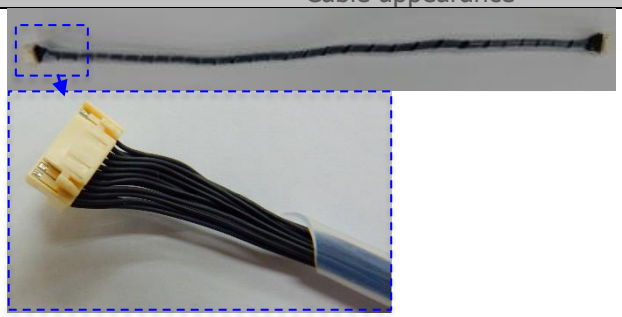 ・ Cable line：UL3302 AWG28 (FURUKAWA ELECTRIC CO.,LTD.) 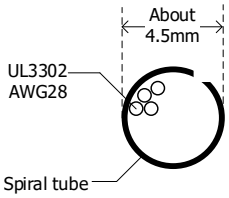 ・ Housing：NSHDR-20V-Z (J.S.T.MFG. CO., LTD) ◆Reference document：In preparation
Robot cable	30, 60, 150cm	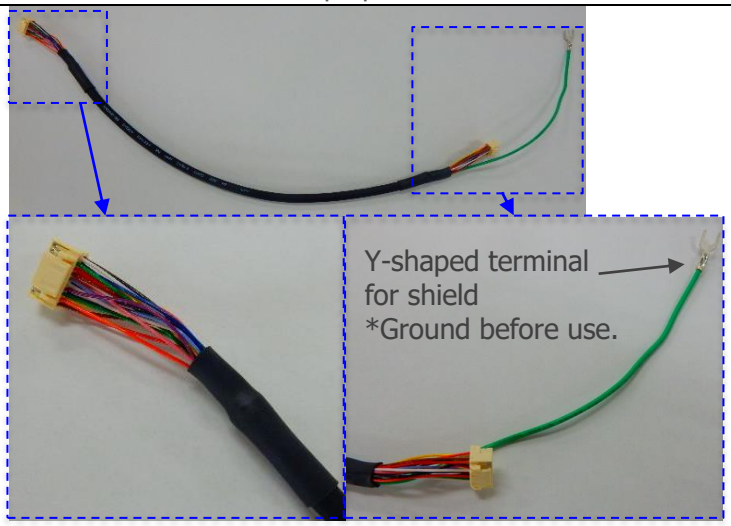 ・ Cable line：RMDHⅡ-SB (21913) (DYDEN CORPORATION) 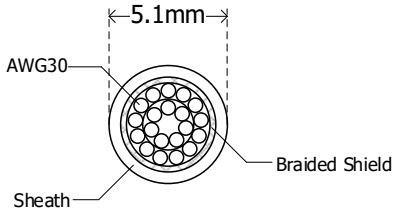 ・ Housing：NSHDR-20V-Z (J.S.T.MFG.CO., LTD.) ・ Shade terminal (Y type)：0.3Y-3 (NICHIFU CO., LTD.) ◆Reference document：In preparation

©2020 Mitsumi co., Ltd. All rights reserved.

Evaluation Board

Table 13 Evaluation Board line-up

Board Name	External Communication	Power Supply	No. of connectable sensors	Board appearance
ForceSensor ControllerBoard Ver2.0	USB	USB	Max. 1 pcs	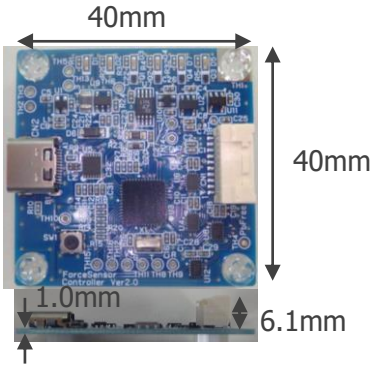 ・ Conversion Board side connector ：SM20B-NSHDZS (J.S.T.MFG. CO., LTD) ・ External communication side connector ：CAM-L05-024-050-ACGAA (MITSUMI ELECTRIC CO., LTD)
ForceSensor MultiFingerBoard Ver1.0	Ethernet	DC Jack	Max. 5 pcs	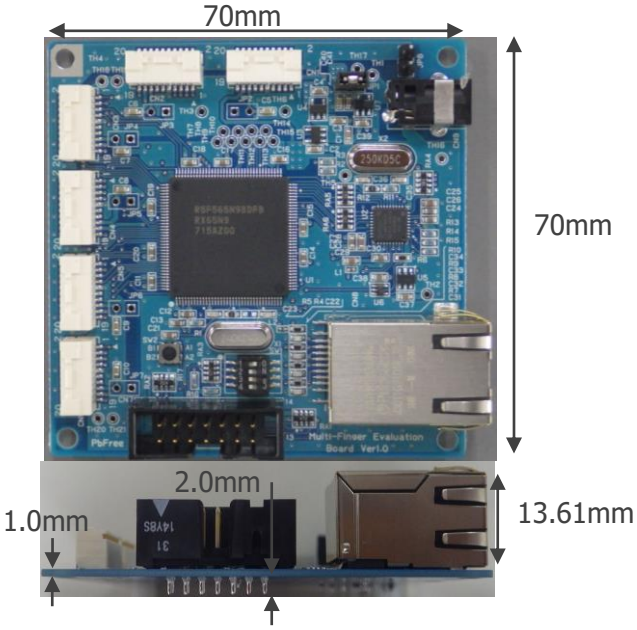 ・ Conversion Board side connector ：SM20B-NSHDZS (J.S.T.MFG. CO., LTD.) ・ External communication side connector ：J3011G21DNLT (Pulse Electronics CO., LTD.) ・ DC jack：M04-730A0 (MARUSHIN ELECTRIC MFG. CO., LTD)

The contents of this document are subject to change without notice.
©2020 Mitsumi co., Ltd. All rights reserved.

Conversion Board

Conversion Board is intended to connect a cable to this product. Connect the product terminal to the FPC connector and convert it to a cable connector with the number of pins according to the application.

Table 14 Conversion board line-up

<table>
<tr><th>Board Name</th><th>Terminal conversion table</th><th>Board appearance</th></tr>
<tr><td>Conv. BD
Ver1.0
(For Evaluation Kit)</td><td>20pin
<table>
<tr><th>MMS101 Output</th><th>Conv.BD Output</th><th>MMS101 Output</th><th>Conv.BD Output</th></tr>
<tr><td>VDD</td><td>VDD</td><td>CSB_Fz</td><td>CSB_Fz</td></tr>
<tr><td>VDDIO</td><td>VDDIO</td><td>CSB_Mx</td><td>CSB_Mx</td></tr>
<tr><td>VLDOOUT</td><td>VLDOOUT</td><td>CSB_My</td><td>CSB_My</td></tr>
<tr><td>SG</td><td>SG</td><td>CSB_Mz</td><td>CSB_Mz</td></tr>
<tr><td>FG</td><td>FG</td><td>SDO_Fx</td><td>SDO_Fx</td></tr>
<tr><td>FG</td><td>N.C.</td><td>SDO_Fy</td><td>SDO_Fy</td></tr>
<tr><td>SCLK</td><td>SCLK</td><td>SDO_Fz</td><td>SDO_Fz</td></tr>
<tr><td>SDI</td><td>SDI</td><td>SDO_Mx</td><td>SDO_Mx</td></tr>
<tr><td>CSB_Fx</td><td>CSB_Fx</td><td>SDO_My</td><td>SDO_My</td></tr>
<tr><td>CSB_Fy</td><td>CSB_Fy</td><td>SDO_Mz</td><td>SDO_Mz</td></tr>
</table></td><td>20mm
 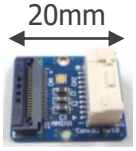
17mm
0.5mm
 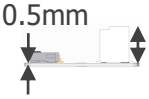
6.1mm
・ Sensor side connector：FH52K-20S-0.5SH (HIROSE ELECTRIC CO.,LTD)
・ Controll/Evaluation board side connector：SM20B-NSHDZS (J.S.T.MFG. CO., LTD.)</td></tr>
<tr><td>Conv. BD
Ver2.0</td><td>12pin(Integrated CSB pin)
<table>
<tr><th>MMS101 Output</th><th>Conv.BD Output</th><th>MMS101 Output</th><th>Conv.BD Output</th></tr>
<tr><td>VDD</td><td>VDD</td><td>CSB_Fz</td><td rowspan="4"></td></tr>
<tr><td>VDDIO</td><td>VDDIO</td><td>CSB_Mx</td></tr>
<tr><td>VLDOOUT</td><td>-</td><td>CSB_My</td></tr>
<tr><td>SG</td><td>SG</td><td>CSB_Mz</td></tr>
<tr><td>FG</td><td>-</td><td>SDO_Fx</td><td>SDO_Fx</td></tr>
<tr><td>FG</td><td>-</td><td>SDO_Fy</td><td>SDO_Fy</td></tr>
<tr><td>SCLK</td><td>SCLK</td><td>SDO_Fz</td><td>SDO_Fz</td></tr>
<tr><td>SDI</td><td>SDI</td><td>SDO_Mx</td><td>SDO_Mx</td></tr>
<tr><td>CSB_Fx</td><td rowspan="2">CSB</td><td>SDO_My</td><td>SDO_My</td></tr>
<tr><td>CSB_Fy</td><td>SDO_Mz</td><td>SDO_Mz</td></tr>
</table></td><td>Appearance undecided, In preparation</td></tr>
<tr><td>Conv. BD
Ver2.1</td><td>12pin(Integrated SDO pin)
<table>
<tr><th>MMS101 Output</th><th>Conv.BD Output</th><th>MMS101 Output</th><th>Conv.BD Output</th></tr>
<tr><td>VDD</td><td>VDD</td><td>CSB_Fz</td><td>CSB_Fz</td></tr>
<tr><td>VDDIO</td><td>VDDIO</td><td>CSB_Mx</td><td>CSB_Mx</td></tr>
<tr><td>VLDOOUT</td><td>-</td><td>CSB_My</td><td>CSB_My</td></tr>
<tr><td>SG</td><td>SG</td><td>CSB_Mz</td><td>CSB_Mz</td></tr>
<tr><td>FG</td><td>-</td><td>SDO_Fx</td><td rowspan="7">SDO</td></tr>
<tr><td>FG</td><td>-</td><td>SDO_Fy</td></tr>
<tr><td>SCLK</td><td>SCLK</td><td>SDO_Fz</td></tr>
<tr><td>SDI</td><td>SDI</td><td>SDO_Mx</td></tr>
<tr><td>CSB_Fx</td><td>CSB_Fx</td><td>SDO_My</td></tr>
<tr><td>CSB_Fy</td><td>CSB_Fy</td><td>SDO_Mz</td></tr>
</table></td><td>Appearance undecided, In preparation</td></tr>
</table>

©2020 Mitsumi co., Ltd. All rights reserved.

MITSUMI ELECTRIC CO.,LTD.
Strategy Engineering Department Semiconductor Business Division
Tel: +81-46-230-3470 / http://www.mitsumi.co.jp

Notes:
Any products mentioned this datasheet are subject to any modification in their appearance and others for improvements without prior notification. The details listed here are not a guarantee of the individual products at the time of ordering. When using the products, you will be asked to check their specifications.

The contents of this document are subject to change without notice.
©2020 Mitsumi co., Ltd. All rights reserved.