Quadrant - Photodiode JQ50P

characteristics :

- Si-PIN-photodiode
- spectral range 400 - 1100 nm
- active area 4 x 12,5 mm^2
- hermetic sealed TO-8 package

application :

- position sensing of laser beams
- autokollimators
- xy - coordinate measurement
- position sensing applications

absolute maximum ratings:

reverse voltage	20	V
operating temperature	- 25 °C ... 80	°C
storage temperature	- 40 °C ... 100	°C
welding temperature (3s)	260	°C

technical data :

Common test conditions, as not otherwise specified: υ_a = 25 °C V_R = 20 V
Parameters are valid for one single element, as not otherwise specified!

parameter	test condition	min	typ.	max	unit
active area			12,5		mm^2
diameter of active area			7,89		mm
separation gap between elements			50		µm
maximum of spectral responsivity S_{max} bei			850		nm
spectral range λ_{max} λ_{min}	$S = 0,1 \times S_{max}$		 400 1100		nm
absolute spectral responsivity	λ = 850 nm		0,6		A/W
dark current I_R	E = 0 lx		2	10	nA
risetime t_r of photocurrent	R_L = 50 Ω λ = 850 nm I_P = 10 µA		0,4		µs
capacitance	F = 1 MHz E = 0 lx		20		pF

Rev 06/01

Germany and other countries: LASER COMPONENTS GmbH, Phone: +49 (0)8142 28640, Fax: +49 (0)8142 286411, info@lasercomponents.com
Great Britain: LASER COMPONENTS Ltd., Phone: +44 1245 491 499, Fax: +44 1245 491 801, info@lasercomponents.co.uk

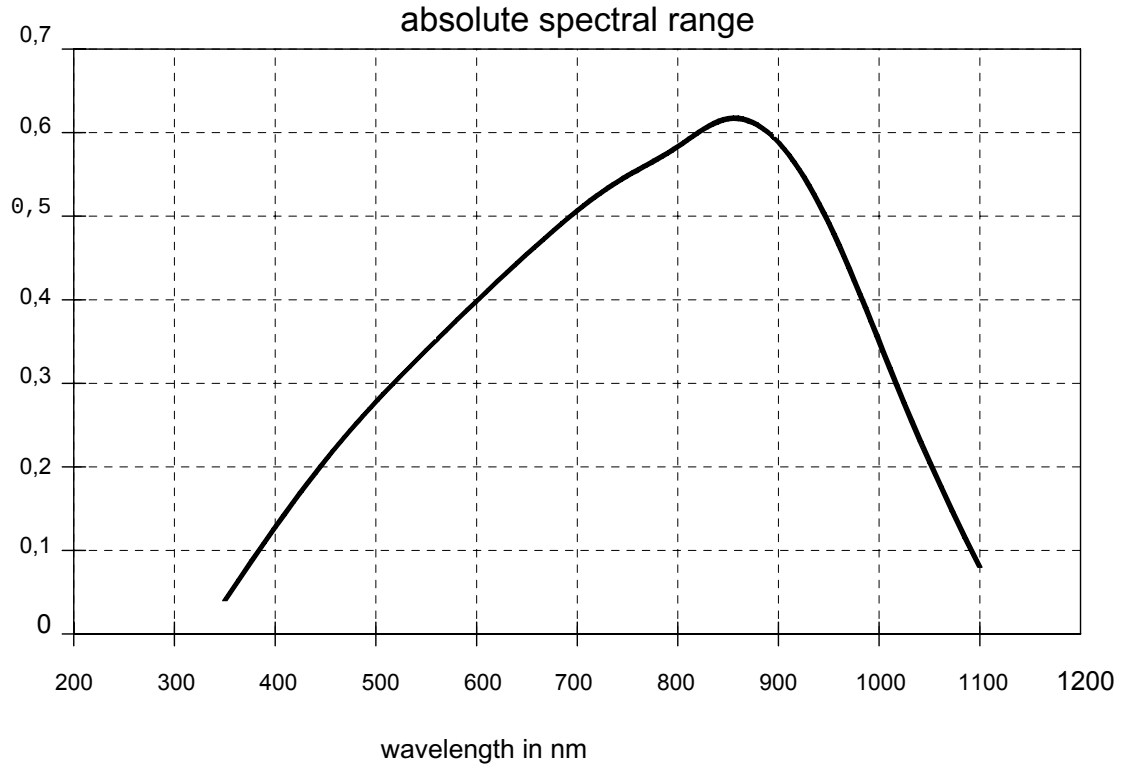

pin configuration

1, 3, 4, 6 quadrant 1 - 4
2 catode & case

package dimension

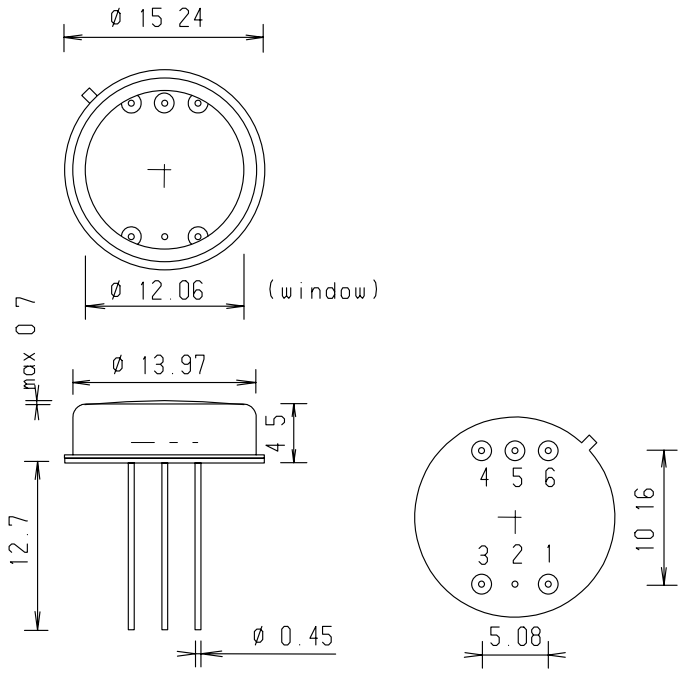

Germany and other countries: LASER COMPONENTS GmbH, Phone: +49 (0)8142 28640, Fax: +49 (0)8142 286411, info@lasercomponents.com
Great Britain: LASER COMPONENTS Ltd., Phone: +44 1245 491 499, Fax: +44 1245 491 801, info@lasercomponents.co.uk