D

DO-NOT-SCALE

DATE	SYM.	REVISION RECORD	AUTH	DR.	CK.
170C05	09	ALL ACTIVE PARTS - DIM W +/- .015 WAS W +/-.010	273775	JVM	GER

PART NO. 02962870

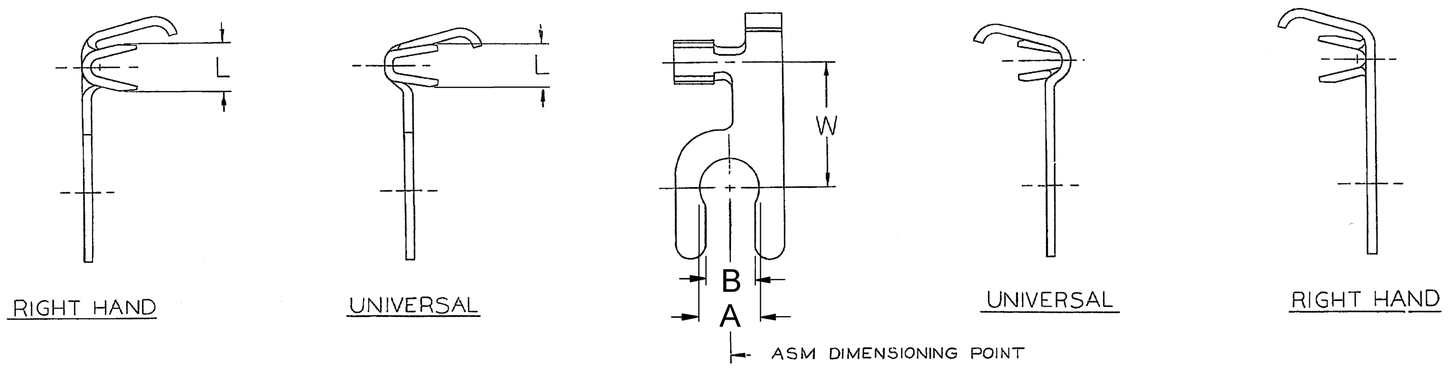

02962870

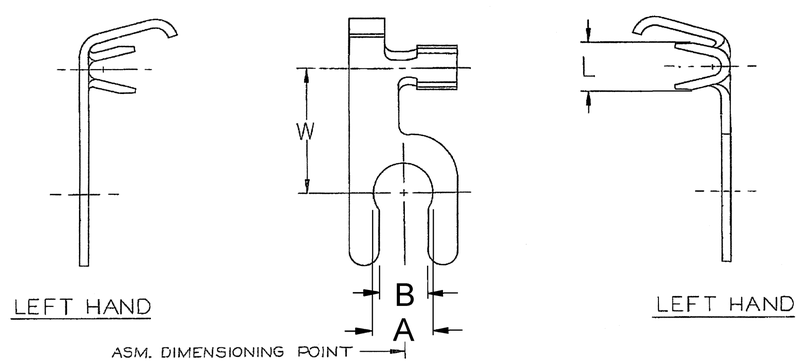

NOTE——1. ANGULAR TOLERANCE ± 2°.

.2010/.2070	#10	M5
.1700/.1760	#8	M4
"A" DIA.	STANDARD SCREW/STUD SIZE	METRIC

8900331	A1		.0403×1.250	S-3614159					II	R/H	5.0-3.0	4.48-3.49	.170-.176	.148	.225	.500
8900330	A1		.0403×1.250	S-3614159					II	L/H	5.0-3.0	4.48-3.49	.170-.176	.148	.225	.500
6288582	M1		.0403×1.250	S-3614159					II	L/H	5.0-3.0	4.48-3.49	.201-.207	.175	.225	.500
6288581	M1		.0403×1.250	S-3614159					II	R/H	5.0-3.0	4.48-3.49	.201-.207	.175	.225	.500
6288412	M1		.0320×1.125	S-3614130					II	L/H	TWO 0.8-0.5	2.40-2.03	.201-.207	.175	.165	.438
6288411	M1		.0320×1.125	S-3614130					II	R/H	TWO 0.8-0.5	2.40-2.03	.201-.207	.175	.165	.438
2962212	L1		.0320×1.000	S-3614127	2973111	OBS	P-403127		I	UNIV.	0.8-0.5	2.40-2.03	.201-.207	.175	.150	.438
2962211	L1		.0320×1.000	S-3614127	2977561	OBS	P-403127		I	UNIV.	0.8-0.5	2.40-2.03	.170-.176	.145	.150	.438
PART NO.	REV.	STATUS	MAT'L SIZE	SPEC.	PART NO.	STATUS	SPEC.	BLANK TYPE	TYPE	SIZE (MM²)	DIA (MM)	A	B	L ±.015	W ±.015
UNPLATED					TIN PLATED					CABLE					

CODE NO. 6900	TOLERANCE UNLESS OTHERWISE SPECIFIED DECIMAL: TWO PLACE ±.01 THREE PLACE ± 005	
QC-C-1031		
DWG. DATE 10-1-58	SCALE 4:1	DR G. LOPEZ G.
EST. NO.		CK J. VILLAMIL M. — DATE 25OC05
REFERENCE NO		APPR — DATE
		APPR G. E. ROBISON — DATE 26OC05
MATERIAL SPEC.	SEE CHART	
NAME	TERMINAL SPADE SIDE	
PART NO 02962870		SIZE D

PACKARD ELECTRIC DIVISION
GENERAL MOTORS CORPORATION
WARREN, OHIO

PACKARD ELECTRIC