DATA CONTAINED IN THIS DOCUMENT IS PROPRIETARY OF TROMPETER ELECTRONICS INC. AND SHALL NOT BE DISCLOSED, COPIED OR USED FOR PROCUREMENT OR MANUFACTURE WITHOUT EXPRESS WRITTEN PERMISSION.

**REVISIONS**

| REV | DESCRIPTION | DATE | APPROVED |
|---|---|---|---|
| B | REVISED PER ECO 15763 | 2-7-05 | WB |

TABLE 1

| DASH NO/8 | CABLES ACCOMMODATED | A DIM | B DIM | C FLATS | D FLATS | E DIA | ASSEMBLE PER |
|---|---|---|---|---|---|---|---|
| -7 | TRC-50-2<br>TRC-75-2 | 1.135 | .096 | .438 | .438 | .500 | TAI-189 |
| -8 | 8227, BELDEN | 1.716 | .130 | .625 | .688 | .750 | TAI-103 |
| -9 | TWC-78-2<br>~~TWC-124-2~~ | | .096 | .438 | | | |
| -A9<br>4 | BL782, TIMES<br>BL982, TIMES<br>BL1242, TIMES | 1.135 | 4 | 4 | .438 | .500 | TAI-102 |
| -10 | RG-22<br>754E, AT&T | 1.716 | .130 | .625 | .688 | .750 | TAI-103 |
| -11 | 760A, AT&T | | | | | | |
| -12 | 16PEVL, AT&T<br>VI-AL, GENERAL | | | | | | TAI-128 |
| -13 | TRF-59, TIMES | | | | | | TAI-129 |
| -13A | 8232, BELDEN | | | | | | TAI-165 |
| -14 | 8233, BELDEN | | | | | | TAI-129 |
| -23 | 250-3884, MICRODOT | 1.135 | .096 | .438 | .438 | .500 | TAI-189 |
| -24 | 202-3934, MICRODOT | | | | | | TAI-102 |
| -24A | 9530A5117, RAYCHEM | | | | | | TAI-189 |
| -25 | T-43M, GENERAL | | | | | | TAI-102 |
| -25A | 5021H5331, RAYCHEM | | | | | | TAI-189 |
| -26 | 7028A5518, RAYCHEM | | | | | | |
| -27 | T19TPSJ2619EN, WOVEN<br>202-3927, MICRODOT<br>202-3942, MICRODOT | | | | | | TAI-102 |
| -29 | TWC-78-1/TWC-124-1A | | | | | | |
| -30 | 761A, AT&T<br>8441, BELDEN | | | | | | |
| -32 | TRC-50-1 | | | | | | TAI-189 |
| -33 | TRC-75-1 | | | | | | |
| -42 | 21-204, ESSEX<br>4463, CONSOLIDATED | | | | | | |
| -43 | 250-4044/250-4045<br>293-3930, MICRODOT | | | | | | |
| -45 | M275000-22TE2T14<br>1100-66F, STANDARD | | | | | | TAI-102 |
| -46 | 9860, BELDEN | 1.716 | .130 | .625 | .688 | .750 | TAI-103 |
| -47 | M17/176-00002 | 1.135 | .096 | .438 | .438 | .500 | TAI-102 |
| -49 | TWAC-78-1F2 | | | | | | |
| -54 | 89207, BELDEN | 1.716 | .130 | .625 | .688 | .750 | TAI-103 |
| -55 | 89272, BELDEN | 1.135 | .096 | .438 | .438 | .500 | TAI-102 |
| -56 | GC875GC1, GRUMMAN | | | | | | TAI-189 |
| -57 | GC875GB1, GRUMMAN | | | | | | |
| -58 | GC875TM24H, GRUMMAN | | | | | | TAI-102 |
| -59 | GC875LN1, GRUMMAN | | | | | | |
| -60 | M17/177, THERMATICS<br>380-10045, BOEING | | | | | | TAI-189 |
| -64 | 7528A5314, RAYCHEM | | | | | | |

TABLE 2
CABLE ENTRY DIAMETER

| DASH NO | ENTRY DIA | DASH NO | ENTRY DIA |
|---|---|---|---|
| -7 | .274 | -30 | .235 |
| -8 | .345 | -32 | .191 |
| -9 | .285 | -33 | .217 |
| ~~-A9~~ | | ~~-42~~ | ~~.300~~ |
| -10 | .455 | -43 | .200 |
| -11 | .347 | -45 | .183 |
| -12 | .485 | -46 | .475 |
| -13 | .362 | -47 | .164 |
| -13A | .352 | -49 | .132 |
| -14 | .490 | -54 | .323 |
| -23 | .183 | -55 | .250 |
| -24 | .191 | -56 | .191 |
| -24A | .200 | -57 | |
| -25 | .285 | -58 | .198 |
| -25A | | -59 | |
| -26 | .183 | -60 | .217 |
| -27 | .145 | -64 | .183 |
| -29 | .191 | | |

FIGURE 1
-9 SHOWN 6

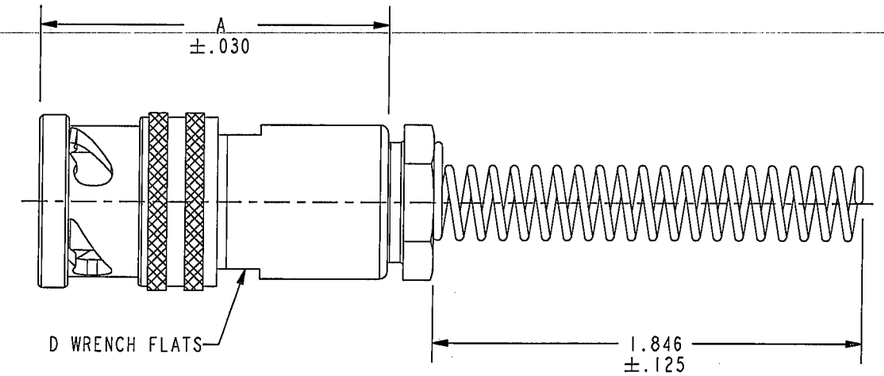


FIGURE 2
-9 SHOWN

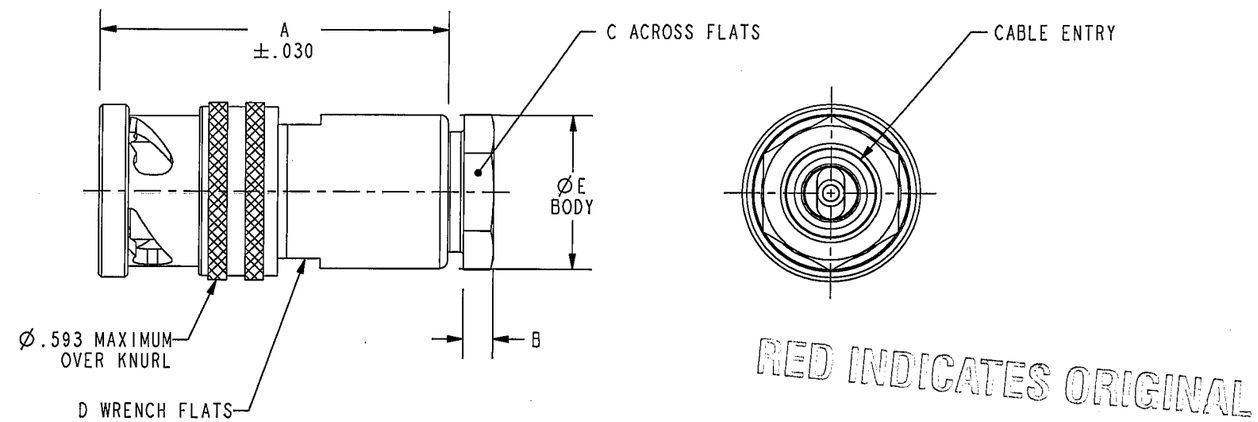


RED INDICATES ORIGINAL

| MODEL NO | DASH NO/CABLE GROUP | | | | | | | | | | | | | | | | |
|---|---|---|---|---|---|---|---|---|---|---|---|---|---|---|---|---|---|
| PL75FL (TWINAX) | -8 | -9 | -A9 | -10 | -11 | -12 | -24 | -25 | -27 | -29 | -30 | -45 | -46 | -47 | -49 | -54 | -55 |
| PL75FL (TRIAX) | -7 | -13 | -13A | -14 | -23 | -24A | -25A | -26 | -32 | -33 | -42 | -43 | -56 | -57 | -59 | -60 | -64 |
| PL75FL (QUADRAX) | -58 | | | | | | | | | | | | | | | | |

5. EXAMPLE OF COMPLETE PART NUMBER:

305-1242 - 47 BR

BASIC PART NUMBER — 305-1242
DASH NUMBER (CABLE GROUP, SEE TABLE 1) — 47
BEND RELIEF (OPTIONAL) 6 — BR

4 CLAMP NUT OMITTED

3. CONCENTRIC TWINAX/TRIAX 4-LUG TRB CABLE PLUG, VACUUM READY

2. FINISH: TFS-1A (NICKEL)

1. ALL DIM ARE IN INCHES

NOTES: UNLESS OTHERWISE SPECIFIED.

8 CHECK WITH CABLE MANUFACTURER FOR OUTGASSING PROPERTIES OF THE SELECTED CABLE

7. ALL MATERIALS MEET THE OUTGASSING REQUIRMENTS OF NASA SPECIFICATION SP-R-0022A AND TEI VACUUM READY SPECIFICATION TT-09

6 IF BEND RELIEF SPRING IS REQUIRED (SEE FIG 1) ADD SUFFIX "BR" TO PART NO (NOT AVAILABLE WITH CABLE GROUPS -8, -10, -11, -12, -13, -13A, -14, -46, & -54)

INTERPRET DRAWING PER MIL-STD-100. DIMENSIONS ARE IN INCHS AND INCLUDE FINISH THICKNESS UNLESS OTHERWISE SPECIFIED

TOL: UNLESS SPECIFIED
.XX ± .02
.XXX ± .010
ANGLE ± 1°

TROMPETER ® ELECTRONICS, INC.

| | | | |
|---|---|---|---|
| DRN L.M. | 2-1-05 | MATERIAL | TITLE: PL75FL/PL75FLBR VACUUM READY |
| CHK T. Kha | 2-3-05 | | |
| QUALITY MS | 2/4/05 | FINISH | |
| MANUF BP | 2/4/05 | | |
| APPROVED WB | 2/3/05 | | |

| 305-0515 | SIZE B | CAGE CODE 14949 | DRAWING NO. 305-1242 | REV B |
|---|---|---|---|---|
| NEXT ASSY | PRO/E FILE NO. 305-1242 | DO NOT SCALE DWG | SCALE 1/1 | DATE 7-31-98 | SHEET 1C |