REVISIONS		
ISS	ZONE	DESCRIPTION\PER REQUEST\DATE

1. CRIMPED FERRULE
   HEX CRIMP SIZE .213"
2. CONTACT PIN TO SOLDER
3. MAX. PANEL THICKNESS=2.4mm

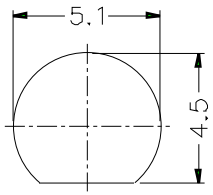

RECOMMENDED
MOUNTING HOLE

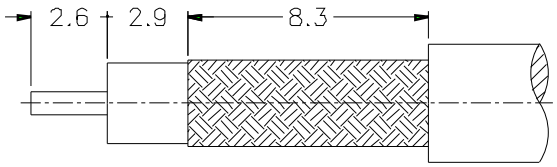

RECOMMENDED
CABLE STRIPPING DIM'S

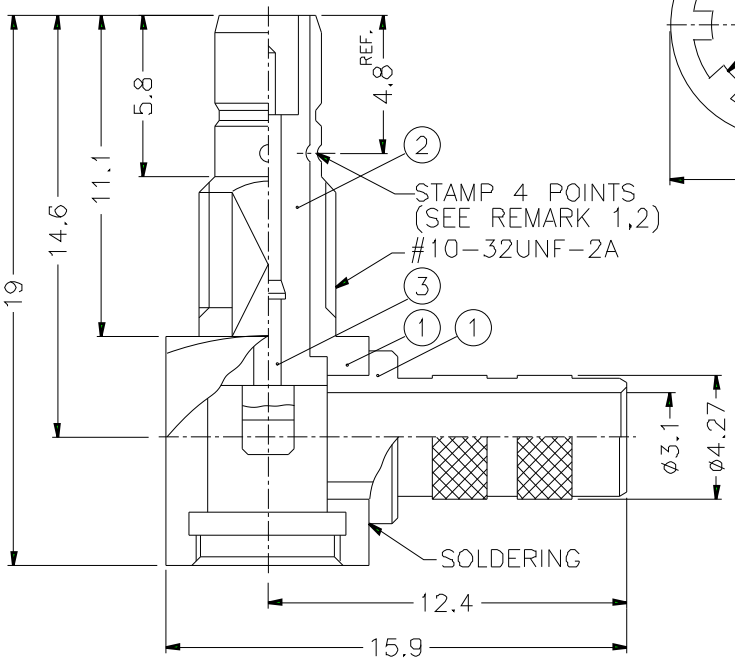

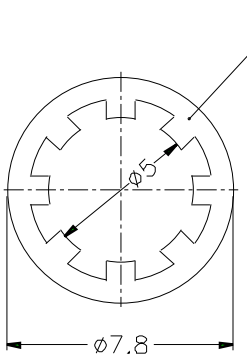

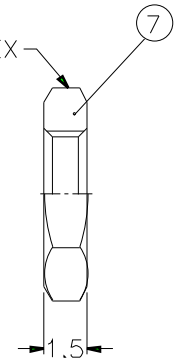

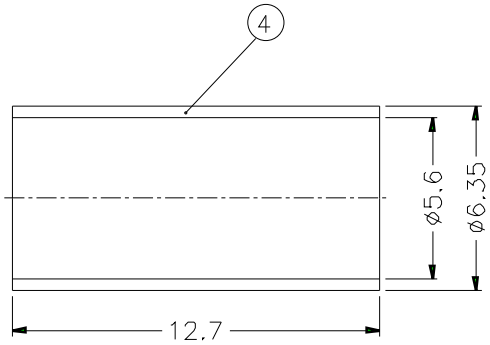

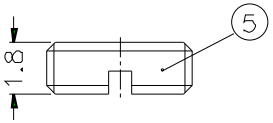

NOTES. FINISH (PLATING THICKNESS IN MICRO-INCHES)
1. BRASS PER QQ-B-626
2. BRASS PER QQ-B-613
3. GOLD PL. 3 MIN. THICK OVER NICKEL PL. 100 MIN. THICK OVER COPPER STRIKE
4. GOLD PL. 30 MIN. THICK OVER NICKEL PL. 100 MIN. THICK OVER COPPER STRIKE
5. TEFLON MIL-P-1946B
6. JIS H 3250, C 2700

REMARK: 1. NO.2 MUST WITASTAND A 6 LBS. MIN. PUSHOUT FORCE FROM NO.1 AFTER STAMP OVER OPERATION
2. REMARK 1. IS MAINTAINED BY STAMPING THE FOUR POINTS SHOWN ON THE DRAWING WITHOUT PUNCTURING NO.1

NO.	DESCRIPTION	MATERIAL	FINISH	Q'TY	DRAWING NO
7	HEX NUT	NOTE 1	NOTE 3	1	HN635-10-32X15
6	LOCK WASHER	NOTE 2	NOTE 3	1	LW-78/5X05
5	COVER	NOTE 1	NOTE 3	1	DMT-2004-004N-8
4	FERRULE	NOTE 6	NOTE 3	1	FR-635/56X127
3	CONTACT PIN	NOTE 1	NOTE 4	1	SMB1412A1-3
2	INSULATOR	NOTE 5	NATURAL	1	SMB1412A1-2
1	BODY WITH BARREL	NOTE 1	NOTE 3	1	SMB1412A2-1S-427/31

DIMENSIONS ARE IN MILLIMETERS

UNLESS OTHERWISE SPECIFIED TOLERANCES
0.5-6 = ±0.2
6-30 = ±0.4
30-120 = ±0.6
120-315 = ±1
315-1000 = ±1.6
1000-2000 = ±2.4

SCALE 4/1 | ISSUE A

PART NO. SMB1412A2-3GT30G-1A-50

APPROVED | DATE 10-11-01'

CHECKED | DATE 10-11-01'

DRAWN | DATE 10-11-01'

FILE NO

Amphenol

TITLE SMB R/A BULKHEAD CRIMP JACK (FOR RG-142A/U, 223/U, 400/U)

DRAWING NO. KJ-SMB1412A2-3GT30G-223U-50

ITEM NO.