QUADRUPLE 2-INPUT MULTIPLEXERS WITH STORAGE

OCTOBER 1976–REVISED DECEMBER 1983

- Double-Rail Outputs on 'LS398
- Single-Rail Outputs on 'LS399
- 'LS398 is Similar to 'LS253, Which Has Inverted Clock
- Selects One of Two 4-Bit Data Sources and Stores Data Synchronously with System Clock
- Applications:
  - Dual Source for Operands and Constants in Arithmetic Processor; Can Release Processor Register Files for Acquiring New Data
  - Implement Separate Registers Capable of Parallel Exchange of Contents Yet Retain External Load Capability
  - Universal Type Register for Implementing Various Shift Patterns; Even Has Compound Left-Right Capabilities

SN54LS398 . . . J OR W PACKAGE
SN74LS398 . . . DW, J OR N PACKAGE
(TOP VIEW)

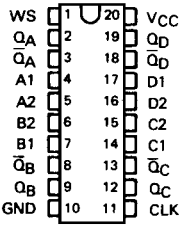

SN54LS398 . . . FK PACKAGE
SN74LS398 . . . FN PACKAGE
(TOP VIEW)

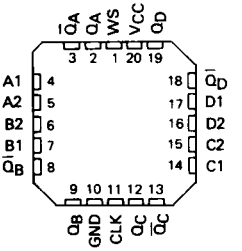

SN54LS399 . . . J OR W PACKAGE
SN74LS399 . . . D, J OR N PACKAGE
(TOP VIEW)

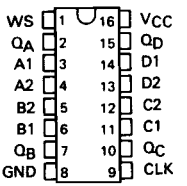

SN54LS399 . . . FK PACKAGE
SN74LS399 . . . FN PACKAGE
(TOP VIEW)

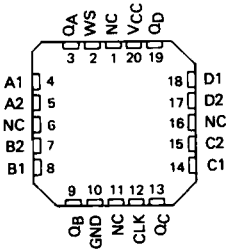

NC – No internal connection

description

These monolithic quadruple two-input multiplexers with storage provide essentially the equivalent functional capabilities of two separate MSI functions (SN54LS157/SN74LS157 and SN54LS175/SN74LS175) in a single 16-pin or 20-pin package.

When the word-select input is low, word 1 (A1, B1, C1, D1) is applied to the flip-flops. A high input to word select will cause the selection of word 2 (A2, B2, C2, D2). The selected word is clocked to the output terminals on the positive-going edge of the clock pulse.

Typical power dissipation is 37 milliwatts. SN54LS398 and SN54LS399 are characterized for operation over the full military range of −55°C to 125°C, SN74LS398 and SN74LS399 are characterized for operation from 0°C to 70°C.

FUNCTION TABLE

INPUTS		OUTPUTS			
WORD SELECT	CLOCK	Q_A	Q_B	Q_C	Q_D
L	↑	a1	b1	c1	d1
H	↑	a2	b2	c2	d2
X	L	Q_{A0}	Q_{B0}	Q_{C0}	Q_{D0}

PRODUCTION DATA
This document contains information current as of publication date. Products conform to these specifications per the terms of Texas Instruments standard warranty. Production processing does not necessarily include testing of all parameters.

TEXAS INSTRUMENTS
POST OFFICE BOX 225012 • DALLAS, TEXAS 75265

logic diagram

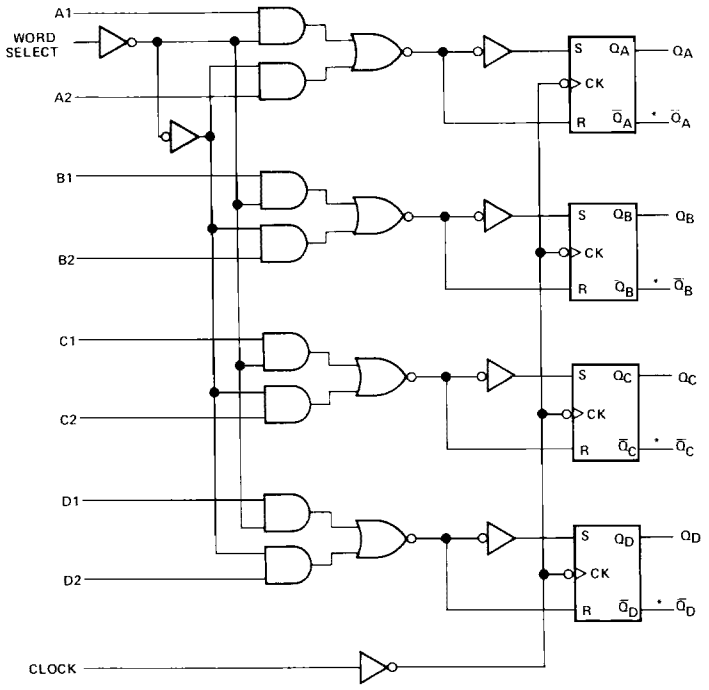

• . . . . . 'LS398 Only

schematics of inputs and outputs

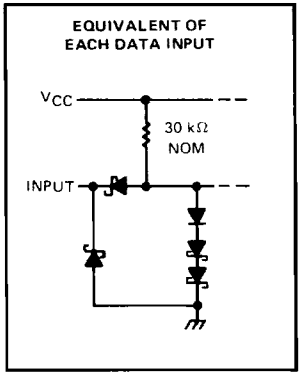

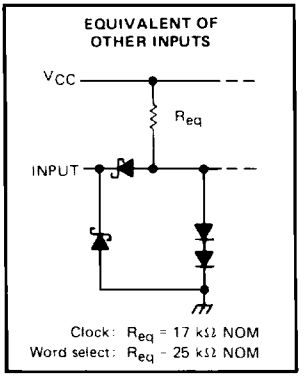

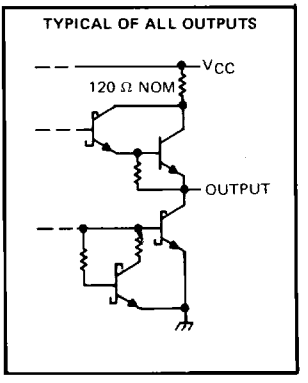

TEXAS INSTRUMENTS
POST OFFICE BOX 225012 • DALLAS TEXAS 75265

absolute maximum ratings over operating free-air temperature range (unless otherwise noted)

Supply voltage, V_{CC} (see Note 1) . . . . . 7 V
Input voltage . . . . . 7 V
Operating free-air temperature range: SN54LS' . . . . . −55°C to 125°C
SN74LS' . . . . . 0°C to 70°C
Storage temperature range . . . . . −65°C to 150°C

NOTE 1: Voltage values are with respect to network ground terminal.

recommended operating conditions

		SN54LS'			SN74LS'			UNIT
		MIN	NOM	MAX	MIN	NOM	MAX	
Supply voltage, V_{CC}		4.5	5	5.5	4.75	5	5.25	V
High-level output current, I_{OH}				−400			−400	μA
Low-level output current, I_{OL}				4			8	mA
Width of clock pulse, high or low level, t_w		20			20			ns
Setup time, t_{su}	Data	25			25			ns
	Word select	45			45			
Hold time, t_h	Data	0			0			ns
	Word select	0			0			
Operating free-air temperature, T_A		−55		125	0		70	°C

electrical characteristics over recommended operating free-air temperature range (unless otherwise noted)

PARAMETER		TEST CONDITIONS†		SN54LS' MIN	SN54LS' TYP‡	SN54LS' MAX	SN74LS' MIN	SN74LS' TYP‡	SN74LS' MAX	UNIT
V_{IH}	High-level input voltage			2			2			V
V_{IL}	Low-level input voltage					0.7			0.8	V
V_{IK}	Input clamp voltage	V_{CC} = MIN, I_I = −18 mA				−1.5			−1.5	V
V_{OH}	High-level output voltage	V_{CC} = MIN, V_{IH} = 2 V, V_{IL} = V_{ILmax} I_{OH} = −400 μA		2.5	3.4		2.7	3.4		V
V_{OL}	Low-level output voltage	V_{CC} = MIN, V_{IH} = 2 V, V_{IL} = V_{ILmax}	I_{OL} = 4 mA		0.25	0.4		0.25	0.4	V
			I_{OL} = 8 mA					0.35	0.5	
I_I	Input current at maximum input voltage	V_{CC} = MAX, V_I = 7 V				0.1			0.1	mA
I_{IH}	High-level input current	V_{CC} = MAX, V_I = 2.7 V				20			20	μA
I_{IL}	Low-level input current	V_{CC} = MAX, V_I = 0.4 V				−0.4			−0.4	mA
I_{OS}	Short-circuit output current§	V_{CC} = MAX		−20		−100	−20		−100	mA
I_{CC}	Supply current	V_{CC} = MAX, See Note 2			7.3	13		7.3	13	mA

† For conditions shown as MIN or MAX, use the appropriate value specified under recommended operating conditions.
‡ All typical values are at V_{CC} = 5 V, T_A = 25°C.
§ Not more than one output should be shorted at a time, duration of the short-circuit should not exceed one second.
NOTE 2: With all outputs open and all inputs except clock low, I_{CC} is measured after applying a momentary 4.5 V, followed by ground, to the clock input.

switching characteristics, V_{CC} = 5 V, T_A = 25°C

PARAMETER		TEST CONDITIONS	MIN	TYP	MAX	UNIT
t_{PLH}	Propagation delay time, low-to-high-level output	C_L = 15 pF, R_L = 2 kΩ, See Note 3		18	27	ns
t_{PHL}	Propagation delay time, high-to-low-level output			21	32	

NOTE 3: See General Information Section for load circuits and voltage waveforms.