Customer Drawing

REV	DATE	DESCRIPTION	ECN NO.	NAME
A		NEW RELEASE		
B	02.01.03	1 MODIFICATION	AK0201001	LOME
C	02.01.03	2 MODIFI NOTE	AK0210004	Maike
D	03.01.18	3 DELETE "N4"	AK0210004	Maike
E	03.09.19	4 ADD DIM	I0309003	JERRY
F	04.07.01	5 DELETE"2LOCK"	AK0406023	JING
G	04.07.19	6 ADD GREEN OPTION& "N9" PLATED OPTION	AK0407017	XZ
H	04.10.13	7 ADD PACKING OPTIONAL	AK0410004	JING
I	05.01.06	8 ADD SPEC.OPTIONAL	AK0501007	RONG

3505 SERIES USB A R/A SINGLE PORT TYPE

MATERIAL

HOUSING : SEE ORDER INFORMATION (UL94V-0)
HOUSING COLOR :SEE ORDER INFORMATION
TERMINAL : COPPER ALLOY
TERMINAL PLATING: SEE ORDER INFORMATION
SHELL : COPPER ALLOY
SHELL PLATING : SEE ORDER INFORMATION
RECOMMENDED P.C.BOARD THICKNESS OF 1.57mm

ORDER INFORMATION

7 * 3505 – * * * ** ** * *

" ":NORMAL PRODUCT
6"G":GREEN PRODUCT

5 ~~2:2 LOCK~~
4:4 LOCK

FRONT TOUCH OPTION
M:WITH FRONT TOUCH
N:WITHOUT FRONT TOUCH

HOUSING :
8 B:BLACK(PBT) W:WHITE(PBT)
8 M:WHITE(NL6T)
HIGH TEMPERATURE MATERIAL
8 N:BLACK(NL6T)
HIGH TEMPERATURE MATERIAL
U:BLUE(PBT) L:BLUE(NL46)

SHELL PLATING:
T1:100u" Sn PLATED
9 N9:50~100u" Ni PLATED

CONTACT PLATING:
S1:1u" Au P1:10u" Pd/Ni
S2:5u" Au P2:15u" Pd/Ni
S3:10u" Au P3:20u" Pd/Ni
S4:15u" Au P4:30u" Pd/Ni
S5:30u" Au P5:40u" Pd/Ni
S6:3u" Au
(S:SELECTIVE Au)
(P:2u"Au OVER SELECTIVE Pd/Ni)

7 PACKING:
" ":TRAY
"1":TAPE&REEL

LOGO:
W:WIESON LOGO
V:EMECO LOGO
N:WITHOUT LOGO

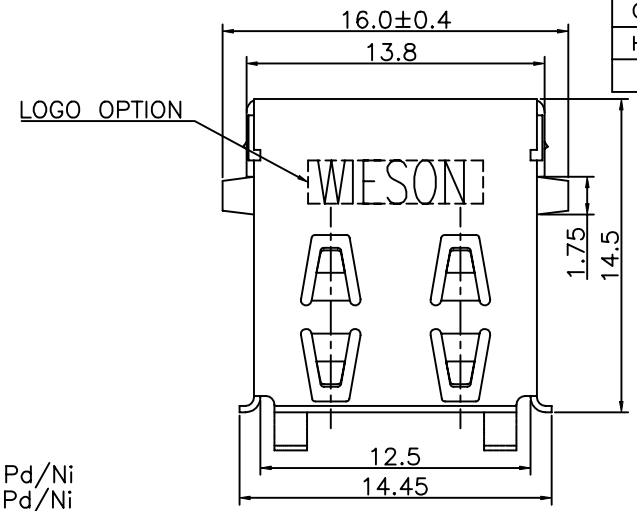

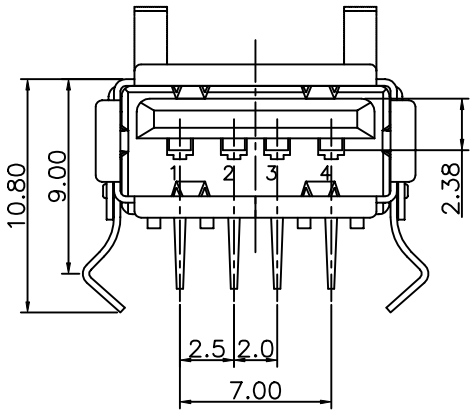

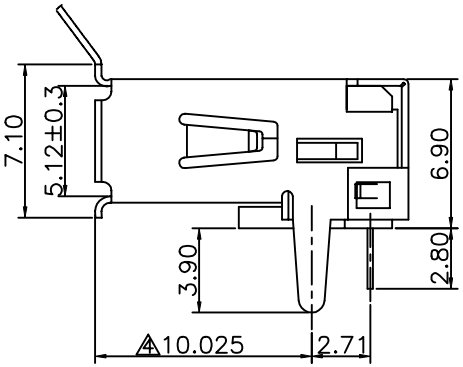

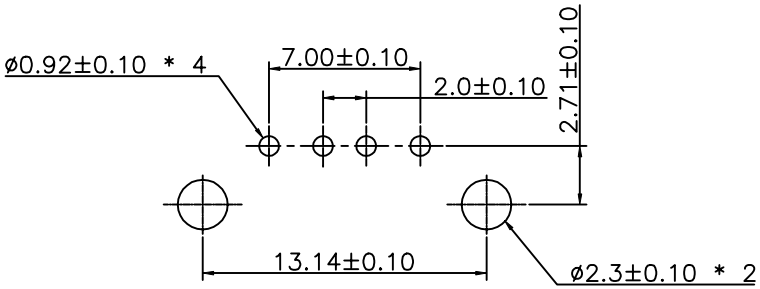

RECOMMENDED P.C.BOARD HOLE LAYOUT

GENERAL TOLERANCE ± 0.25 mm GENERAL ANGLE TOLERANCE ±3°	WIESON TECHNOLOGIES CO., LTD	PART NO.:	8 8 *3505–*********
	DRAWN BY: RONG(WSC)	DRAWING NO.	8 8 *3505–*********
	CHECKED BY: JIMMY	DRAWING SIZE	4 : 1 A4
	APPROVED BY: JERRY	UNIT	mm
	SORTING NO.: WSC	PAGE	1 OF 1

ISSUED

[ARTICLE:044033 V4]