50 Watt AC-DC (DC-DC) Converters M Series

Input voltage range 85...264 V AC
1, 2 or 3 isolated outputs up to 48 V DC
3 kV AC I/O electric strength test voltage

- Extremely wide input voltage range suitable for most AC mains around the world
- Efficient input filter and built-in surge and transient suppression circuitry
- Outputs individually isolated and controlled
- Outputs fully protected against overload

Safety according to IEC/EN 60950

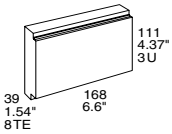

Summary

The M series of AC-DC (DC-DC) converters represents a broad and flexible range of power supplies for use in advanced industrial electronic systems. Features include high efficiency, reliability, low output voltage noise and excellent dynamic response to load/line changes due to individual regulation of each output.

The converter inputs are protected against surges and transients occuring at the Input. An input over- and undervoltage lock-out circuitry disables the outputs if the input voltage is outside the specified range. These types include an inrush current limitation preventing circuit breakers and fuses from being damaged at switch-on.

All outputs are open- and short-circuit proof and are protected against overvoltages by means of built-in suppressor diodes. The outputs can be inhibited by a logic signal applied to the connector pin 2 (i). If the inhibit function is not used pin 2 should be connected to pin 23 to enable the outputs.

LED indicators display the status of the converter and allow visual monitoring of the system at any time.

Full input to output, input to case, output to case and output to output isolation is provided. The modules are designed and built according to the international safety standard IEC/EN 60950 and have been approved by the safety agencies LGA (Germany) and UL (USA). The UL Mark for Canada has been officially recognized by regulatory authorities in provinces across Canada.

The case design allows operation at nominal load up to 71°C in a free air ambient temperature. If forced cooling is provided, the ambient temperature may exceed 71°C but the case temperature should remain below 95°C under all conditions.

A temperature sensor generates an inhibit signal which disables the outputs if the case temperature T_C exceeds the limit. The outputs are automatically re-enabled when the temperature drops below the limit.

Various options are available to adapt the converters to individual applications.

The modules may either be plugged into 19" rack systems according to DIN 41494, or be chassis mounted.

Table of Contents

	Page
Summary	1
Type Survey and Key Data	2
Type Key	3
Functional Description	4
Electrical Input Data	5
Electrical Output Data	6
Auxiliary Functions	9
Electromagnetic Compatibility (EMC)	11
Immunity to Environmental Conditions	13
Mechanical Data	14
Safety and Installation Instructions	15
Description of Options	18
Accessories	24

Type Survey and Key Data

Non standard input/output configurations or special custom adaptions are available on request. See also: *Commercial Information: Inquiry Form for Customized Power Supply*.

The type survey tables provide an overview of the basic input and output configurations. More than 1000 different types have been manufactured providing different output configurations and customized specialities. Please consult Power-One's field sales engineers for specific requirements. The best technical solution will carefully be considered and a detailed proposal submitted.

Table 1: Class I equipment

Output 1		Output 2		Output 3		Input Voltage Range and Efficiency [1]		Options
$U_{o\,nom}$ [V DC]	$I_{o\,nom}$ [A]	$U_{o\,nom}$ [V DC]	$I_{o\,nom}$ [A]	$U_{o\,nom}$ [V DC]	$I_{o\,nom}$ [A]	$U_{i\,min}$...$U_{i\,max}$ **85…264 V AC/47...440 Hz** (88…372 V DC)	η_{min} [%]	
5.1	8.0	-	-	-	-	LM 1001-7R	73	–9
12.0	4.0	-	-	-	-	LM 1301-7R	79	E
15.0	3.4	-	-	-	-	LM 1501-7R	78	P
24.0	2.0	-	-	-	-	LM 1601-7R	81	D0...D9
48.0	1.0	-	-	-	-	LM 1901-7R	81	V0,V2,V3
12.0	2.0	12.0	2.0	-	-	LM 2320-7	77	A
15.0	1.7	15.0	1.7	-	-	LM 2540-7	78	H
								F
5.1	5.0	12.0	0.7	12.0	0.7	LM 3020-7	73	
5.1	5.0	15.0	0.6	15.0	0.6	LM 3040-7	71	

Table 2: Class II equipment (double insulation) ⧈

Output 1		Output 2		Output 3		Input Voltage Range and Efficiency [1]		Options
$U_{o\,nom}$ [V DC]	$I_{o\,nom}$ [A]	$U_{o\,nom}$ [V DC]	$I_{o\,nom}$ [A]	$U_{o\,nom}$ [V DC]	$I_{o\,nom}$ [A]	$U_{i\,min}$...$U_{i\,max}$ **85…264 V AC/47...65 Hz** (88…372 V DC)	η_{min} [%]	
5.1	8.0	-	-	-	-	LMZ 1001-7R	73	–9
12.0	4.0	-	-	-	-	LMZ 1301-7R	79	E
15.0	3.4	-	-	-	-	LMZ 1501-7R	78	P
24.0	2.0	-	-	-	-	LMZ 1601-7R	81	D0…D9
48.0	1.0	-	-	-	-	LMZ 1901-7R	81	V0,V2,V3
12.0	2.0	12.0	2.0	-	-	LMZ 2320-7	77	A
15.0	1.7	15.0	1.7	-	-	LMZ 2540-7	78	H
								F
5.1	5.0	12.0	0.7	12.0	0.7	LMZ 3020-7	73	
5.1	5.0	15.0	0.6	15.0	0.6	LMZ 3040-7	71	

[1] Efficiency at $U_{i\,nom}$ and $I_{o\,nom}$.

Type Key

Type Key L M Z 2 5 40 -7 E R P D V A H F

Input voltage range U_i: 85...264 V AC, 88...372 V DC L

Series ..... M

Class II Equipment ..... Z

Number of outputs ..... 1...3

Output 1, $U_{o1\ nom}$:

- 5.1 V ..... 0...2
- 12 V 3
- 15 V ..... 4...5
- 24 V 6
- other voltages ..... 7...8
- 48 V 9

other specs for single output modules ..... 01...99

Output 2 and 3, $U_{o2\ nom}$, $U_{o3\ nom}$:

- 5.1 V ..... 01...19
- 12 V ..... 20...39
- 15 V ..... 40...59
- 24 V ..... 60...69

other voltages for multiple output modules ..... 70...99

Ambient temperature range T_A:

- –25…71 °C ..... -7
- –40…71 °C ..... -9
- customer specific ..... -0...-6

Auxiliary functions and options:

- Inrush current limitation ..... E
- Output voltage control input (single output modules only) ..... R [1]
- Potentiometers for fine adjustment of output voltages ..... P [1]
- Save data signal (D0...D9, to be specified) D [2]
- ACFAIL signal (V0, V2, V3, to be specified) V [2]
- Output voltage test sockets ..... A
- Increased electric strength test voltage (o/c) H
- Input fuse built-in (not accessible) ..... F

[1] Feature R excludes option P and vice versa
[2] Option D excludes option V and vice versa

Example: LM 2540-7PD3A: AC-DC converter, input voltage range 85...264 V, providing output 1 with 15 V/1.7 A and output 2 with 15 V/1.7 A; equipped with potentiometers, undervoltage monitoring and test sockets.

Functional Description

The input voltage is fed via an input fuse, an input filter, a rectifier and an inrush current limiter to the input capacitor. This capacitor sources a single transistor forward converter. Each output is powered by a separate secondary winding of the main transformer. The resultant voltages are rectified and their ripples smoothed by a power choke and an output filter. The control logic senses the main output voltage U_{o1} and generates, with respect to the maximum admissible output currents, the control signal for the primary switching transistor. This signal is fed back via a coupling transformer.

The auxiliary outputs U_{o2} and U_{o3} are individually regulated by means of secondary switching transistors. Each auxiliary output's current is sensed using a current transformer. If one of the outputs is driven into current limit, the other outputs will reduce their output voltages as well because all output currents are controlled by the same main control circuit.

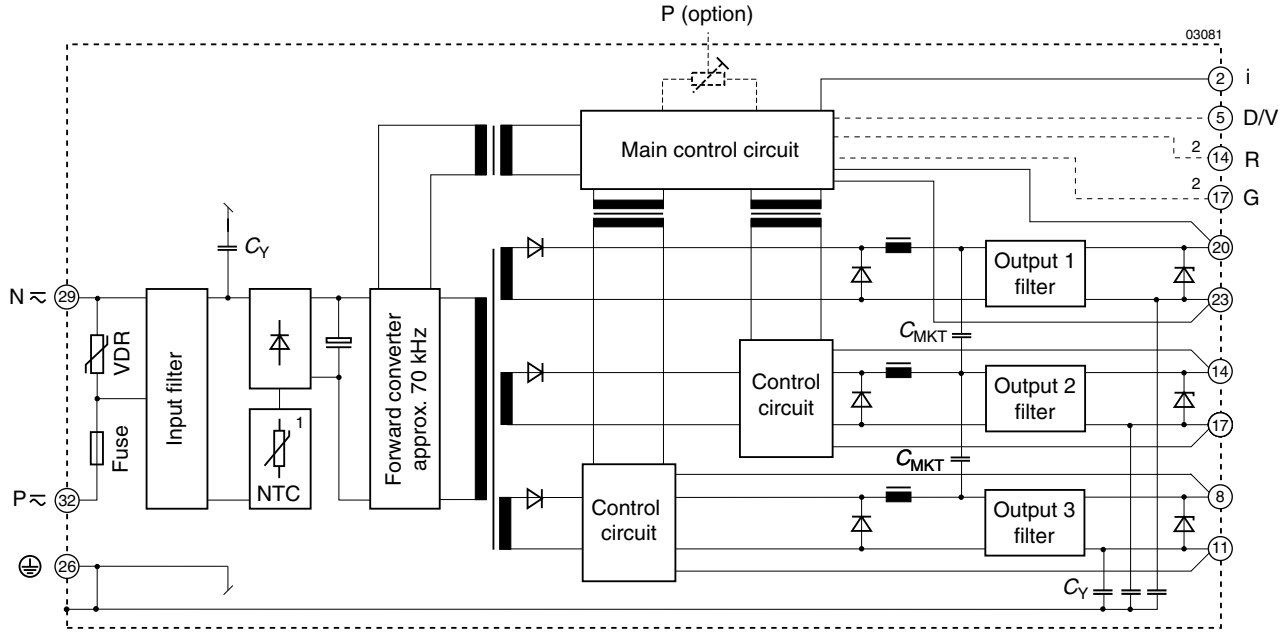

Fig. 1a
Block diagram, class I equipment

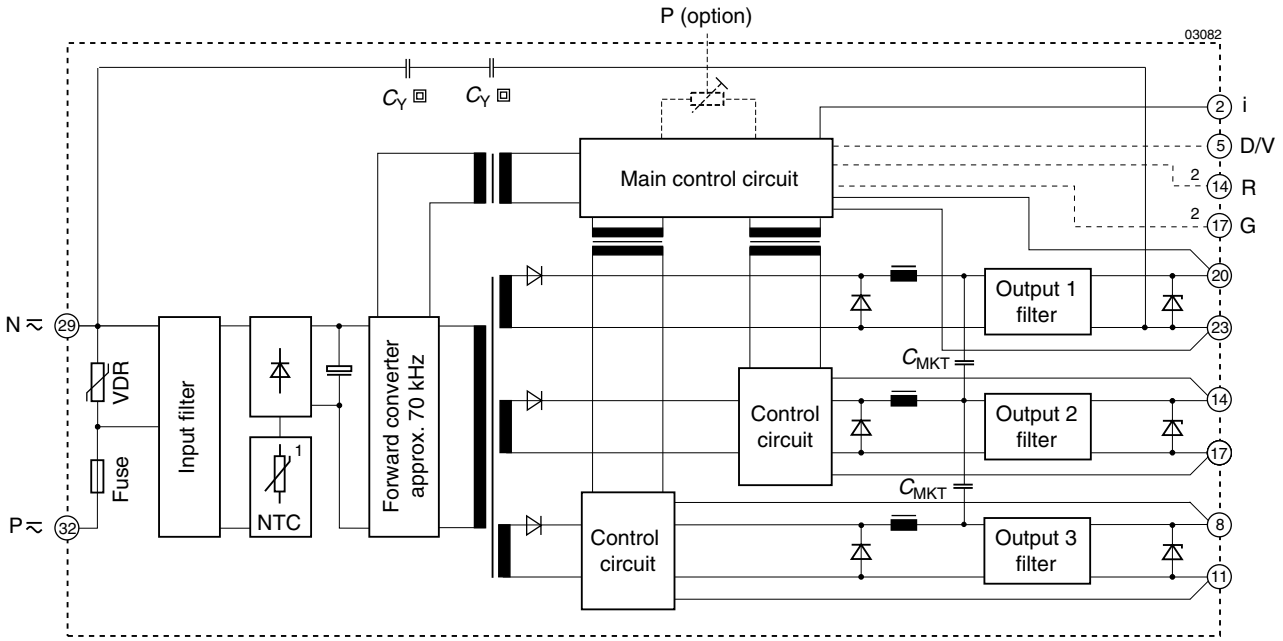

Fig. 1b
Block diagram, class II equipment (double insulation)

[1] Inrush current limiter (option E: refer to the description of option E)
[2] Single output modules LM 1000 and LMZ 1000 with feature R

Electrical Input Data

General conditions:
– T_A = 25°C, unless T_C is specified.
– Connector pins 2 and 23 interconnected, with option P: $U_o = U_{o\,nom}$, R input not connected.

Table 3: Input data

Input			LM/LMZ			
Characteristics		Conditions	min	typ	max	Unit
U_i	Operating Input voltage	$I_o = 0 \ldots I_{o\,nom}$ $T_{C\,min} \ldots T_{C\,max}$	85		264	V AC [1]
			88		372 [7]	V DC
$U_{i\,nom}$	Nominal input voltage			310 [2]		
I_i	DC input current	U_i = 310 V DC, $I_{o\,nom}$ [3]		0.20		A DC
i_i	AC input current	U_i = 115 V AC, $I_{o\,nom}$ [3]		0.77		A_{rms}
		U_i = 230 V AC, $I_{o\,nom}$ [3]		0.43		
$P_{i\,0}$	No-load input power: Single output Double output Triple output	$U_{i\,nom}$ $I_{o1,2,3} = 0$		 1 7 6	 1.5 9 9	W
$P_{i\,inh}$	Idle input power	inhibit mode			2	
$I_{inr\,p}$ [4]	Peak inrush current [8]	$U_i = U_{i\,max}$ $R_S = 0\ \Omega$ [5] T_C = 25°C			60 [6]	A
$t_{inr\,r}$	Rise time [8]			300		µs
$t_{inr\,h}$	Time to half value [8]			900		
R_i	Input resistance [8]	T_C = 25°C	6200 [6]			mΩ
C_i	Input capacitance		140		270	µF
$U_{i\,abs}$	Input voltage limits without any damage		–400		400	V DC
			0		284	V AC

[1] In AC powered mode: LM types: 47...440 Hz; LMZ types: 47...65 Hz.
[2] 310 V DC corresponds with 220 V AC.
[3] With multiple output modules, the same condition for each output applies.
[4] $I_{inr\,p} = U_i/(R_s + R_i)$.
[5] R_S = source resistance.
[6] Value for initial switch-on cycle.
[7] With LMZ converters, the maximum nominal DC output voltage from the front end is 250 V according to IEC/EN 60950.
[8] Not valid for units with option E. See description of options.

Input fuse

A fuse holder containing a slow-blow type fuse (Dimension: 5 × 20 mm) is mounted in the converter's back plate. The fuse protects the module against severe defects. It may not fully protect the module at input voltages exceeding 200 V DC. In applications where the converters operate at DC source voltages above 200 V DC, an external fuse or a circuit breaker at system level should be installed. For applications where the fuse should be inaccessible: see *Option F*.

Table 4: Fuse type (slow-blow)

Series	Schurter type	Part number
LM/LMZ 1000...3000	SPT 2.5 A 250 V	0001.2508

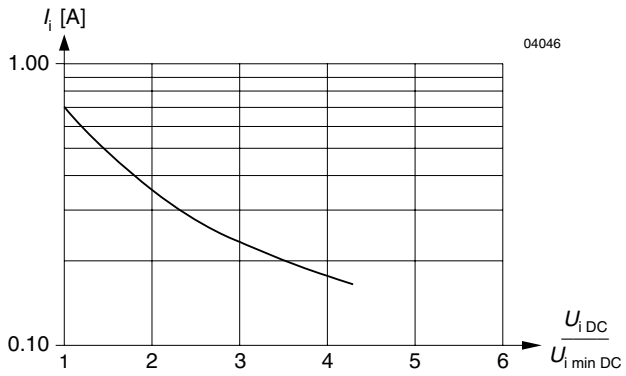

Fig. 2
Typical input current versus relative input voltage at nominal output load

Input Under-/Overvoltage Lock-out

If the input voltage remains below 0.8 $U_{i\,min}$ or exceeds 1.1$U_{i\,max}$ (approx. values), an internally generated inhibit signal disables the output(s). When checking this function the absolute maximum input voltage rating $U_{i\,abs}$ must be carefully considered (see table: *Input Data*). Between $U_{i\,min}$ and the undervoltage lock-out level the output voltage may be below the value defined in table: *Output data* (see: *Technical Information: Measuring and Testing*).

Inrush Current

The modules incorporate an NTC resistor in the input circuitry which (during the initial switch-on cycle) limits the peak inrush current to avoid damage to connectors and switching devices. Subsequent switch-on cycles within a short interval will cause an increase of the peak inrush current due to the warming up of the NTC resistor. Refer also to: *Option E* description.

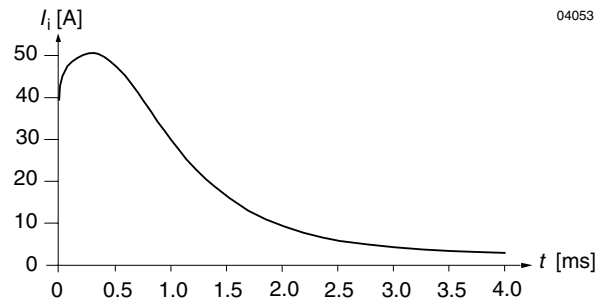

Fig. 3
Typical inrush current at initial switch-on cycle and at $U_{i\,max}$ (DC) versus time

Electrical Output Data

General conditions
– T_A = 25°C, unless T_C is specified.
– Connector pins 2 and 23 interconnected, $U_o = U_{o\,nom}$ (option P), R input not connected.

Table 5: Output data

Output			$U_{o\,nom}$	5.1 V			12 V			15 V			24 V			48 V			
Characteristics			Conditions	min	typ	max	min	typ	max	min	typ	max	min	typ	max	min	typ	max	Unit
U_o	Output voltage		$U_{i\,nom}$, $I_{o\,nom}$ [1]	5.07		5.13	11.93		12.07	14.91		15.09	23.86		24.14	47.72		48.28	V
$U_{o\,p}$	Output overvoltage protection by supressor diode				7.5			21			25			41			85		
$I_{o\,nom}$	Output current		$U_{i\,min}$...$U_{i\,max}$ $T_{C\,min}$...$T_{C\,max}$	see: *Type Survey and Key Data*															
$I_{o\,L}$	Output current limitation response			see fig.: *Typical output voltage U_{o1} versus output currents I_o*															
u_o	Output voltage noise	Low freq.	U_i = 230 V AC $I_{o\,nom}$ [1] IEC/EN 61204 [5] BW = 20 MHz		3	6		5	10		7	14		10	20		20	40	mV_{pp}
		Switch. freq.			15	30		25	50		35	70		40	80		50	100	
		Total			60	120		40	80		40	80		40	80		-		
$\Delta U_{o\,U}$	Static line regulation		$U_{i\,min}$...$U_{i\,nom}$ $U_{i\,nom}$...$U_{i\,max}$ $I_{o\,nom}$ [1]		±10	±30		±12	±50		±15	±60		±15	±60		±15	±60	mV
$\Delta U_{o\,l}$	Static load regulation		$U_{i\,nom}$ $I_{o\,nom}$...0 [2]		6	25		13	50		17	60		30	80		60	150	
$\Delta U_{o\,l\,c}$	Static cross load regulation [4]		$U_{i\,nom}$ $I_{o\,nom}$...0 [3]		0	±15		0	±20		0	±30		0	±40		-		
$u_{o\,d}$	Dynamic load regulation	Voltage deviation	$U_{i\,nom}$ $I_{o\,nom} \leftrightarrow {}^1/_3\, I_{o\,nom}$ [2] IEC/EN 61204		±220			±110			±150			±130			±150		
t_d		Recovery time			0.6			0.6			0.5			1			2		ms
$u_{o\,d\,c}$	Dynamic cross load regulation [4]	Voltage deviation	$U_{i\,nom}$ $I_{o\,nom} \leftrightarrow {}^1/_3\, I_{o\,nom}$ [3] IEC/EN 61204		+10 –100			+10 –75			+10 –140			+20 –200			- -		mV
$t_{d\,c}$		Recovery time			0.05 0.5			0.2 0.3			0.5 0.7			1 2			- -		ms
α_{Uo}	Temperature coefficient $\Delta U_o/\Delta T_C$		$U_{i\,min}$...$U_{i\,max}$ 0...$I_{o\,nom}$		±0.02			±0.02			±0.02			±0.02			±0.02		%/K
					±1.0			±2.4			±3.0			±4.8			±9.6		mV/K

[1] With multiple output modules, the same condition for each output applies.
[2] Condition for specified output. With multiple output modules, other output(s) loaded with constant current $I_{o\,nom}$.
See fig.: *Dynamic load regulation.*
[3] Condition for non-specified output, individually tested, other output(s) loaded with constant current $I_{o\,nom}$.
See fig.: *Dynamic load regulation.*
[4] Multiple output modules.
[5] See: *Technical Information: Measuring and Testing.*

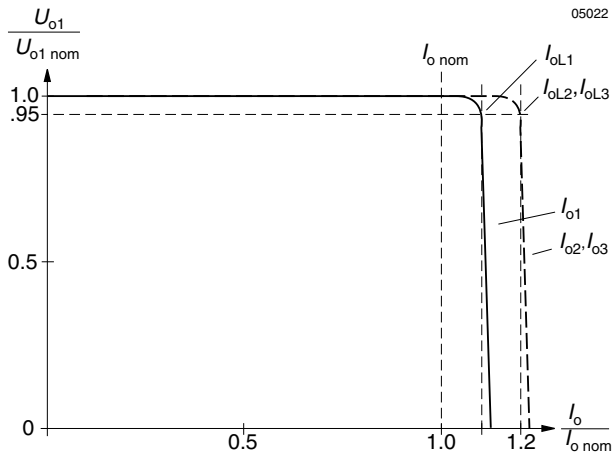

Fig. 4
Typical output voltage U_{o1} versus output currents I_o.

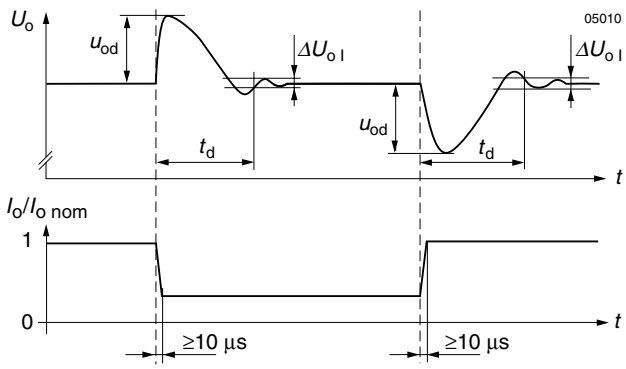

Fig. 5
Dynamic load regulation $u_{o\,d}$ versus load change.

Thermal Considerations

If a converter is located in free, quasi-stationary air (convection cooling) at the indicated maximum ambient temperature $T_{A\,max}$ (see table: *Temperature specifications)* and is operated at its nominal input voltage and output power, the temperature measured at the: *Measuring point of case temperature* T_C (see: *Mechanical Data*) will approach the indicated value $T_{C\,max}$ after the warm-up phase. However, the relationship between T_A and T_C depends heavily on the conditions of operation and integration into a system. The thermal conditions are influenced by input voltage, output current, airflow and temperature of surrounding components and surfaces. $T_{A\,max}$ is therefore, contrary to $T_{C\,max}$, an indicative value only.

Caution: The installer must ensure that under all operating conditions T_C remains within the limits stated in the table: *Temperature specifications.*

Notes: Sufficient forced cooling or an additional heat sink allows T_A to be higher than 71°C (e.g. 85°C) if $T_{C\,max}$ is not exceeded.

For -7 or -9 units at an ambient temperature T_A of 85°C with only convection cooling, the maximum permissible current for each output is approx. 50% of its nominal value as per figure.

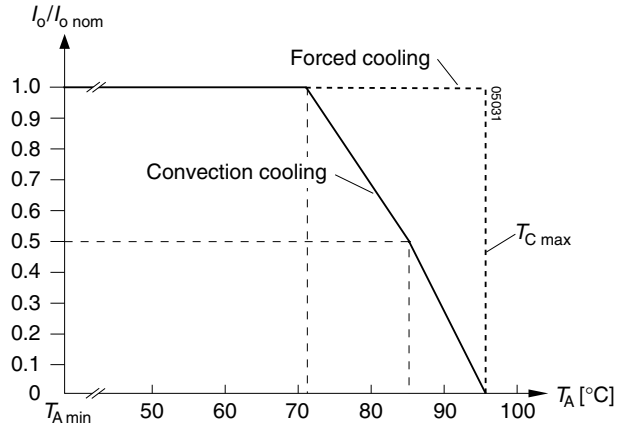

Fig. 6
Output current derating versus temperature for -7 and -9 units.

Thermal Protection

A temperature sensor generates an internal inhibit signal which disables the outputs if the case temperature exceeds $T_{C\,max}$. The outputs are automatically re-enabled if the temperature drops below this limit.

Output Protection

Each output is protected against overvoltages which could occur due to a failure of the internal control circuit. Voltage suppressor diodes (which under worst case condition may become a short circuit) provide the required protection. The suppressor diodes are not designed to withstand externally applied overvoltages. Overload at any of the outputs will cause a shut-down of all outputs. A red LED indicates the overload condition of the respective output.

Parallel and Series Connection

Main outputs of equal nominal voltage can be connected in parallel. It is important to assure that the main output of a multiple output module is forced to supply a minimum current of 0.1 A to enable correct operation of its own auxiliary outputs.

In parallel operation, one or more of the main outputs may operate continuously in current limitation which will cause an increase in case temperature. Consequently, a reduction of the max. ambient temperature by 10 K is recommended.

Main or auxiliary outputs can be connected in series with any other output of the same or another module. In series connection, the maximum output current is limited by the lowest current limit. Output ripple and regulation values are added. Connection wiring should be kept as short as possible.

If output terminals are connected together in order to establish multi-voltage configurations, e.g. +5.1 V, ±12 V etc. the common ground connecting point should be as close as possible to the connector of the converter to avoid excessive output ripple voltages.

Auxiliary outputs should never be connected in parallel!

Output Current Allocation for Special Types

Output currents differing from those given for standard types (as per: *Type Survey and Key Data*) can be provided. A maximum output power of 50 W should be considered, if an ambient temperature range of –25...71°C is required. The maximum permissible output currents are indicated in the table below. If (upon customer's request) output voltages are different from standard values, the relevant output currents have to be adapted accordingly.

With reduced maximum ambient temperature or with forced cooling, the total output power may exceed 50 W. Customized configurations always need to be checked by a feasibility study first. Please ask Power-One's sales engineers for a proposal appropriate to your specific needs. See also: *Commercial Information: Inquiry Form for Customized Power Supply.*

Table 6: Current allocation with special types

Output voltage all types $U_{o1/2/3\,nom}$ [V]		Output 1 all types $I_{o1\,max}$ [A]	Output 2 LM/LMZ 2000 $I_{o2\,max}$ [A]	Output 2 LM/LMZ 3000 $I_{o2\,max}$ [A]	Output 3 LM/LMZ 3000 $I_{o3\,max}$ [A]	Temperature T_A [°C]	T_C [°C]
5.1		8.0	4.0	1.8 (2.5 [1])	1.5	–25...71	–25...95
12		4.0	2.0	1.5	1.2		
15		3.4	1.7	1.2	1.0		
24		2.0	1.0	0.7	0.5		
[2]	5.1	10.0	4.5	2.1 (2.8 [1])	1.8	–25...60	–25...90
	12	5.0	2.5	1.7	1.5		
	15	4.0	2.0	1.5	1.3		
	24	2.5	1.3	0.9	0.7		
	5.1	11.0	5.0	2.4 (3.0 [1])	2.0	–25...50	–25...85
	12	6.0	3.0	2.0	1.7		
	15	4.6	2.3	1.7	1.5		
	24	3.0	1.5	1.0	0.8		

[1] Special high current components required
[2] $U_{i\,min}$ has to be increased

Hold-up Time and Output Response

When the input voltage is switched off, the output voltage will remain high for a certain hold-up time t_h before the output voltage falls below 0.95 $U_{o\,nom}$.

The behavior of the outputs is similar with either the input voltage applied or the inhibit switched low.

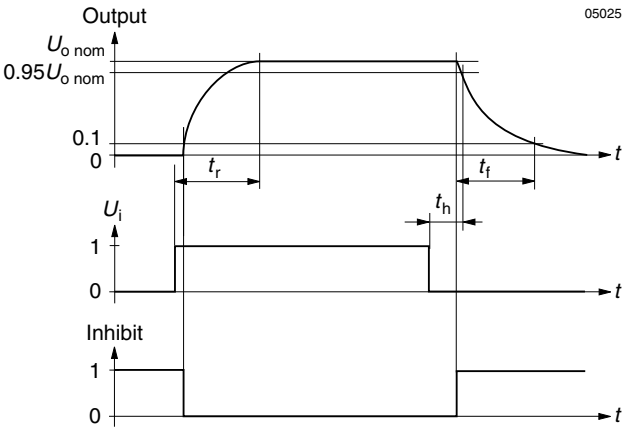

Fig. 7
Output response as a function of input voltage (on/off switching) or inhibit control

An output voltage overshoot will not occur when the module is turned on or off.

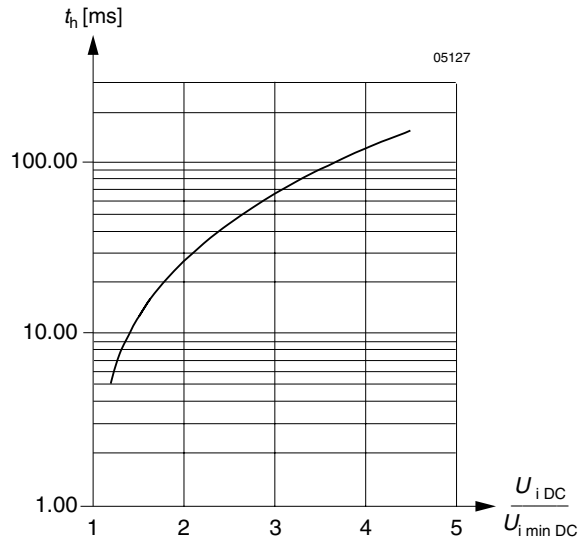

Fig. 8
Typical hold-up time t_h versus relative input voltage at $I_{o\,nom}$

Table 7: Output response time t_r, values not applicable for modules equipped with option E

Type of Converter	t_r at P_o = 0 and t_f at $P_o = P_{o\,nom}$ typ	max	t_r and t_f at P_o = 3/4 $P_{o\,nom}$ typ	max	t_r at $P_o = P_{o\,nom}$ typ	max	Unit
LM/LMZ 1001-7R	5	10	5	10	10	20	ms
LM/LMZ 1301-7R	10	20	15	30	20	40	
LM/LMZ 1501-7R	5	10	10	20	30	60	
LM/LMZ 1601-7R	15	30	25	50	40	80	
LM/LMZ 1901-7R	65	130	100	200	165	330	
LM/LMZ 2320-7	20	40	30	60	50	100	
LM/LMZ 2540-7	15	30	20	40	35	70	
LM/LMZ 3020-7	55	110	85	170	145	290	
LM/LMZ 3040-7	40	80	60	120	100	200	

Conditions: R input not used. For multiple output modules the figures indicated in the table above relate to the output which reacts slowest. All outputs are resistively loaded. Variation of the input voltage within $U_{i\,min}$...$U_{i\,max}$ does not influence the values considerably.

Auxiliary Functions

i Inhibit for Remote On and Off

Note: With open i input: Output is disabled (U_o = off).

The outputs of the module may be enabled or disabled by means of a logic signal (TTL, CMOS, etc.) applied between the inhibit input i and the negative pin of output 1 (Vo1–). In systems with several units, this feature can be used, for example, to control the activation sequence of the converters. If the inhibit function is not required, connect the inhibit pin 2 to pin 23 to enable the outputs (active low logic, fail safe).

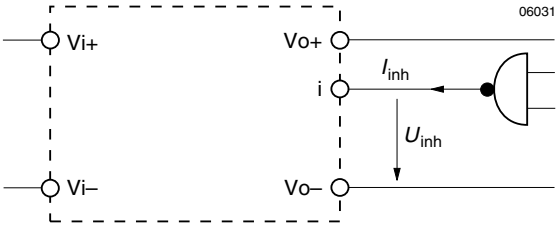

Fig. 9
Definition of inhibit voltage and current

For output response refer to *Hold-up Time and Output Response*.

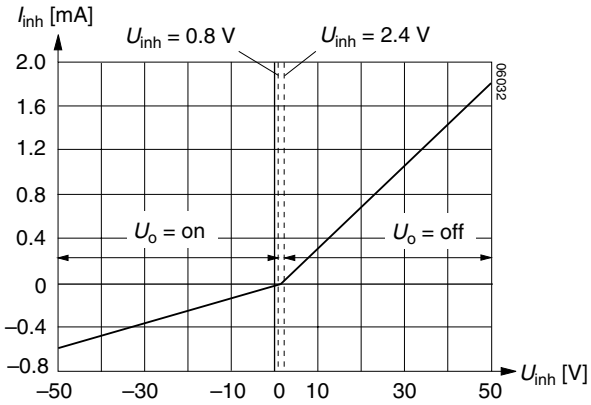

Fig. 10
Typical inhibit current I_{inh} versus inhibit voltage U_{inh}

Table 8: Inhibit data

Characteristics			Conditions	min	typ	max	Unit
U_{inh}	Inhibit input voltage to keep output voltage	U_o = on	$U_{i\,min}$...$U_{i\,max}$ $T_{C\,min}$...$T_{C\,max}$	–50		0.8	V DC
		U_o = off		2.4		50	
I_{inh}	Inhibit current		U_{inh} = 0	–60	–100	–220	µA

R-Control for Output Voltage Adjustment

Notes: With open R input, $U_o \approx U_{o\,nom}$. R excludes option P.

As a standard feature, single output modules offer an adjustable output voltage identified by letter R in the type designation.

The output voltage U_{o1} can either be adjusted with an external voltage (U_{ext}) or with an external resistor (R_1 or R_2). The adjustment range is approximative 0…110% of $U_{o\,nom}$. For output voltages $U_o > U_{o\,nom}$, the minimum input voltage according to: *Electrical Input Data* increases proportionally to $U_o/U_{o\,nom}$.

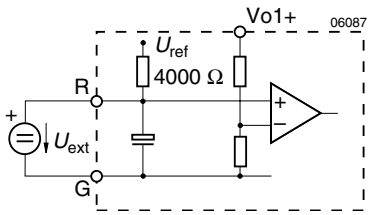

Fig. 11
Voltage adjustment with external voltage U_{ext}

a) $U_o \approx$ 0...110% $U_{o\,nom}$, using U_{ext} between R (14) and G (17):

$$U_{ext} \approx 2.5\ \text{V} \bullet \frac{U_o}{U_{o\,nom}} \qquad U_o \approx U_{o\,nom} \bullet \frac{U_{ext}}{2.5\ \text{V}}$$

Caution: To prevent damage, U_{ext} should not exceed 8 V, nor be negative.

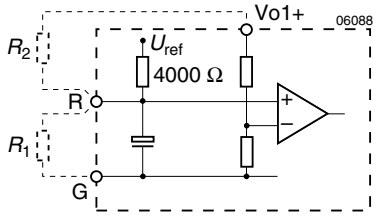

Fig. 12
Voltage adjustment with external resistor R_1 or R_2

b) $U_o \approx$ 0...100% $U_{o\,nom}$, using R_1 between R (14) and G (17):

$$U_o \approx U_{o\,nom} \bullet \frac{R_1}{R_1 + 4000\ \Omega} \qquad R_1 \approx \frac{4000\ \Omega \bullet U_o}{U_{o\,nom} - U_o}$$

c) $U_o \approx U_{o\,nom}$...$U_{o\,max}$, using R_2 between R (14) and Vo1+ (20):

$$U_{o\,max} = U_{o\,nom} + 10\%$$

$$R_2 \approx \frac{4000\ \Omega \bullet U_o \bullet (U_{o\,nom} - 2.5\ \text{V})}{2.5\ \text{V} \bullet (U_o - U_{o\,nom})}$$

$$U_o \approx \frac{U_{o\,nom} \bullet 2.5\ \text{V} \bullet R_2}{2.5\ \text{V} \bullet (R_2 + 4000\ \Omega) - U_{o\,nom} \bullet 4000\ \Omega}$$

Caution: To prevent damage, R_2 should never be less than 47 kΩ.

Note: R inputs of n units with paralleled outputs may be paralleled, too, but if only one external resistor is to be used, its value should be R_1/n, or R_2/n respectively.

Table 9a: R_1 for $U_o < U_{o\,nom}$ (conditions: $U_{i\,nom}$, $I_{o\,nom}$, rounded up to resistor values E 96, $R_2 = \infty$)

$U_{o\,nom}$ = 5.1 V		$U_{o\,nom}$ = 12 V		$U_{o\,nom}$ = 15 V		$U_{o\,nom}$ = 24 V		$U_{o\,nom}$ = 48 V	
U_o [V]	R_1 [kΩ]	U_o [V]	R_1 [kΩ]	U_o [V]	R_1 [kΩ]	U_o [V]	R_1 [kΩ]	U_o [V]	R_1 [kΩ]
0.5	0.432	2.0	0.806	2.0	0.619	4.0	0.806	8.0	0.806
1.0	0.976	3.0	1.33	4.0	1.47	6.0	1.33	12.0	1.33
1.5	1.65	4.0	2.0	6.0	2.67	8.0	2.0	16.0	2.0
2.0	2.61	5.0	2.87	8.0	4.53	10.0	2.87	20.0	2.87
2.5	3.83	6.0	4.02	9.0	6.04	12.0	4.02	24.0	4.02
3.0	5.76	7.0	5.62	10.0	8.06	14.0	5.62	28.0	5.62
3.5	8.66	8.0	8.06	11.0	11.0	16.0	8.06	32.0	8.06
4.0	14.7	9.0	12.1	12.0	16.2	18.0	12.1	36.0	12.1
4.5	30.1	10.0	20.0	13.0	26.1	20.0	20.0	40.0	20.0
5.0	200.0	11.0	44.2	14.0	56.2	22.0	44.2	44.0	44.2

Table 9b: R_2 for $U_o > U_{o\,nom}$ (conditions: $U_{i\,nom}$, $I_{o\,nom}$, rounded up to resistor values E 96, $R_1 = \infty$)

$U_{o\,nom}$ = 5.1 V		$U_{o\,nom}$ = 12 V		$U_{o\,nom}$ = 15 V		$U_{o\,nom}$ = 24 V		$U_{o\,nom}$ = 48 V	
U_o [V]	R_2 [kΩ]	U_o [V]	R_2 [kΩ]	U_o [V]	R_2 [kΩ]	U_o [V]	R_2 [kΩ]	U_o [V]	R_2 [kΩ]
5.15	464	12.1	1780	15.2	1470	24.25	3160	48.5	6810
5.20	215	12.2	909	15.4	750	24.50	1620	49.0	3480
5.25	147	12.3	619	15.6	511	24.75	1100	49.5	2370
5.30	110	12.4	464	15.8	383	25.00	825	50.0	1780
5.35	90.9	12.5	383	16.0	332	25.25	715	50.5	1470
5.40	78.7	12.6	316	16.2	274	25.50	590	51.0	1270
5.45	68.1	12.7	274	16.4	237	25.75	511	51.5	1100
5.50	61.9	12.8	249	16.5	226	26.00	453	52.0	953
		13.0	200			26.25	402	52.5	845
		13.2	169			26.40	383	52.8	806

Display Status of LEDs

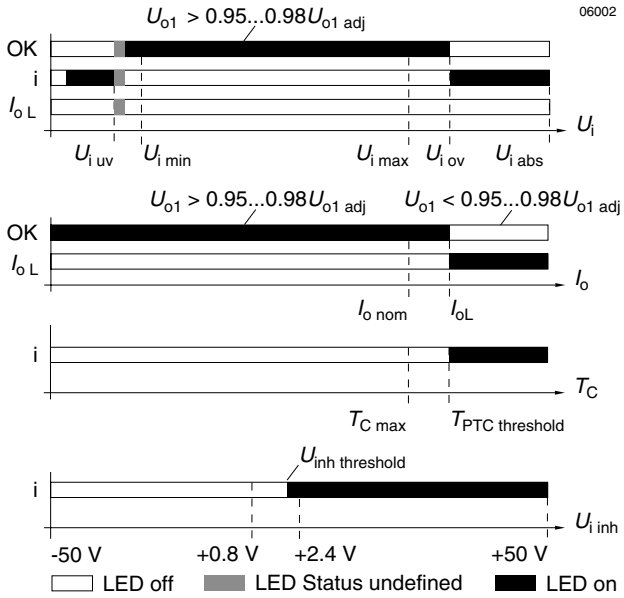

Fig. 13
LEDs "OK" and "i" status versus input voltage
Conditions: $I_o \le I_{o\,nom}$, $T_C \le T_{C\,max}$, $U_{inh} \le 0.8$ V
$U_{i\,uv}$ = undervoltage lock-out, $U_{i\,ov}$ = overvoltage lock-out

LED "OK" and "$I_{o\,L}$" status versus output current
Conditions: $U_{i\,min}$...$U_{i\,max}$, $T_C \le T_{C\,max}$, $U_{inh} \le 0.8$ V

LED "i" versus case temperature
Conditions: $U_{i\,min}$...$U_{i\,max}$, $I_o \le I_{o\,nom}$, $U_{inh} \le 0.8$ V

LED "i" versus U_{inh}
Conditions: $U_{i\,min}$...$U_{i\,max}$, $I_o \le I_{o\,nom}$, $T_C \le T_{C\,max}$

Electromagnetic Compatibility (EMC)

A suppressor diode or a metal oxide VDR (depending upon the type) together with an input fuse and an input filter form an effective protection against high input transient voltages which typically occur in most installations, but especially in battery driven mobile applications. The M series has been successfully tested to the following specifications:

Electromagnetic Immunity

Table 10: Immunity type tests

Phenomenon	Standard [1]	Level	Coupling mode [2]	Value applied	Waveform	Source imped.	Test procedure	In oper.	Perform. [3]
1 MHz burst disturbance	IEC 60255-22-1	III	i/o, i/c, o/o, o/c	2500 V_p	400 damped 1 MHz waves/s	200 Ω	2 s per coupling mode	yes	A
			+i/–i, +o/–o	1000 V_p					
Voltage surge	IEC 60571-1		–i/c, +i/–i	800 V_p	100 µs	100 Ω	1 pos. and 1 neg. voltage surge per coupling mode	yes	A
				1500 V_p	50 µs				
				3000 V_p	5 µs				
				4000 V_p	1 µs				
				7000 V_p	100 ns				
Supply related surge	RIA 12	A [4]	+i/–i	3.5 • U_{batt}	2/20/2 ms	0.2 Ω	1 positive surge	yes	B
		B		1.5 • U_{batt}	0.1/1/0.1 s				A
	EN 50155			1.4 • U_{batt}		1 Ω			
Direct transient	RIA 12 EN 50155 (for EN 50155 levels D, G, H and L only)	C	–i/c, +i/–i	960 V_p	10/100 µs	5 Ω	5 pos. and 5 neg. impulses	yes	A
		D		1800 V_p	5/50 µs				
		E		3600 V_p	0.5/5 µs	100 Ω			
		F		4800 V_p	0.1/1 µs				
		G		8400 V_p	0.05/0.1 µs				
Indirect coupled transient		H	–o/c, +o/–o, –o/–i	1800 V_p	5/50 µs				
		J		3600 V_p	0.5/5 µs				
		K		4800 V_p	0.1/1 µs				
		L		8400 V_p	0.05/0.1 µs				A [5]
Electrostatic discharge (to case)	IEC/EN 61000-4-2	4	contact discharge	8000 V_p	1/50 ns	330 Ω	10 positive and 10 negative discharges	yes	A [6]
			air discharge	15000 V_p					
Electromagnetic field	IEC/EN 61000-4-3	x	antenna	20 V/m	AM 80% 1 kHz	n.a.	26…1000 MHz	yes	A [5]
Electromagnetic field, pulse modulated	ENV 50204	4		30 V/m	50% duty cycle, 200 Hz repetition frequency		900 ±5 MHz	yes	A
Electrical fast transient/burst	IEC/EN 61000-4-4	3	direct, i/c, +i/–i	2000 V_p	bursts of 5/50 ns 2.5/5 kHz over 15 ms; burst period: 300 ms	50 Ω	1 min positive 1 min negative transients per coupling mode	yes	A [5]
		4		4000 V_p					B
Surge	IEC/EN 61000-4-5	4	i/c	4000 V_p	1.2/50 µs	12 Ω	5 pos. and 5 neg. surges per coupling mode	yes	A
		3	+i/–i	2000 V_p		2 Ω			
		x	i/c, +i/–i	2500 V_p	10/700 µs	40 Ω			
Conducted disturbances	IEC/EN 61000-4-6	3	i, o, signal wires	10 V_{rms} (140 dBµV)	AM 80% 1 kHz	150 Ω	0.15...80 MHz	yes	B
Voltage dips, short interruptions and voltage variations	IEC/EN 61000-4-11 (table of the standard)	40%	+i/–i	230 → 92 → 230 V AC	2/1/2 s	n.a.	with LM units only		A
		0%		230 → 0 → 230 V AC					B [7]

[1] Related and previous standards are referenced in: *Technical Information: Standards*.
[2] i = input, o = output, c = case.
[3] A = Normal operation, no deviation from specifications, B = Temporary deviation from specs possible.
[4] If tested with U_{Batt} = 110 V, overvoltage lock-out can occur during the surge.
[5] For converters with 3 output voltages, temporary deviation from specs possible.
[6] With class II equipment (LMZ) only met if case is earthed.
[7] No output voltage during approx. 1.6 s, self-recovering.

Electromagnetic Emissions

Table 11: Emissions at $U_{i\ nom}$ and $I_{o\ nom}$ (LM/LMZ at 230 V AC)

Types	Level		
	CISPR11/EN 55011 CISPR22/EN 55022 ≤30 MHz	CISPR11/EN 55011 CISPR22/EN 55022 ≥30 MHz	CISPR14/ EN 55014 ≥30 MHz
LM 1000	B	B	<limit
LM 2000	B	B	<limit
LM 3000	B	A	<limit
LMZ 1000	B	A	<limit
LMZ 2000	-	-	-
LMZ 3000	A	A	>limit

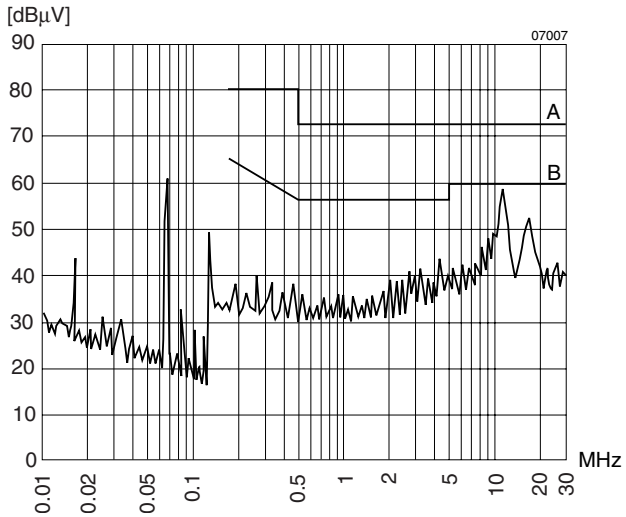

Fig. 14
Typical disturbance voltage (quasi peak) at the input according to CISPR 11/22 and EN 55011/22, measured at $U_{i\ nom}$ and $I_{o\ nom}$.

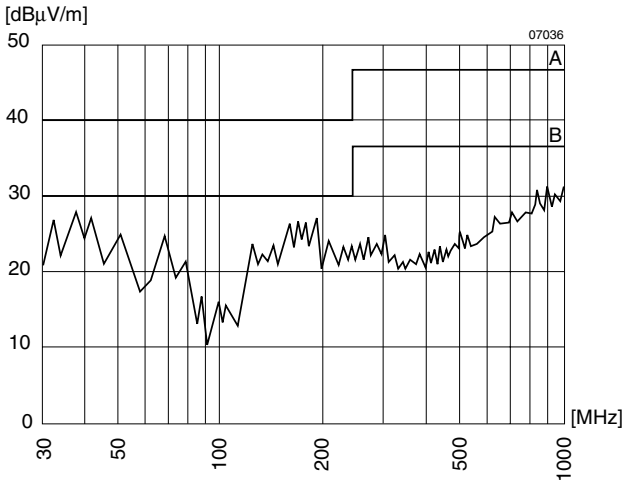

Fig. 15
Typical radiated electromagnetic field strength (quais peak) according to CISPR 11/22 and EN 55011/22 and normalized to a distance of 10 m, measured at $U_{i\ nom}$ and $I_{o\ nom}$.

Immunity to Environmental Conditions

Table 12: Mechanical stress

Test method		Standard	Test conditions		Status
Ca	Damp heat steady state	IEC/DIN IEC 60068-2-3 MIL-STD-810D section 507.2	Temperature: Relative humidity: Duration:	$40^{\pm 2}$ °C $93^{+2/-3}$ % 56 days	Unit not operating
Ea	Shock (half-sinusoidal)	IEC/EN/DIN EN 60068-2-27 MIL-STD-810D section 516.3	Acceleration amplitude: Bump duration: Number of bumps:	100 g_n = 981 m/s^2 6 ms 18 (3 each direction)	Unit operating
Eb	Bump (half-sinusoidal)	IEC/EN/DIN EN 60068-2-29 MIL-STD-810D section 516.3	Acceleration amplitude: Bump duration: Number of bumps:	40 g_n = 392 m/s^2 6 ms 6000 (1000 each direction)	Unit operating
Fc	Vibration (sinusoidal)	IEC/EN/DIN EN 60068-2-6 MIL-STD-810D section 514.3	Acceleration amplitude: Frequency (1 Oct/min): Test duration:	0.35 mm (10...60 Hz) 5 g_n = 49 m/s^2 (60...2000 Hz) 10...2000 Hz 7.5 h (2.5 h each axis)	Unit operating
Fda	Random vibration wide band Reproducibility high	IEC 60068-2-35 DIN 40046 part 23	Acceleration spectral density: Frequency band: Acceleration magnitude: Test duration:	0.05 g_n^2/Hz 20...500 Hz 4.9 $g_{n\ rms}$ 3 h (1 h each axis)	Unit operating
Kb	Salt mist, cyclic (sodium chloride NaCl solution)	IEC/EN/DIN IEC 60068-2-52	Concentration: Duration: Storage: Storage duration: Number of cycles:	5% (30°C) 2 h per cycle 40°C, 93% rel. humidity 22 h per cycle 3	Unit not operating

Table 13: Temperature specifications, valid for an air pressure of 800...1200 hPa (800...1200 mbar)

Temperature			Standard -7		Option -9		
Characteristics		Conditions	min	max	min	max	Unit
T_A	Ambient temperature [1]	Operational [2]	–25	71	–40	71	°C
T_C	Case temperature [3]		–25	95	–40	95	
T_S	Storage temperature [1]	Non operational	–40	100	–55	100	

[1] MIL-STD-810D section 501.2 and 502.2.
[2] See: *Thermal Considerations*.
[3] Overtemperature lock-out at T_C >95°C (PTC).

Table 14: MTBF

Values at specified case temperature	Module types	Ground benign 40°C	Ground fixed 40°C	Ground fixed 70°C	Ground mobile 50°C	Unit
MTBF [1]	LM/LMZ 1000 LM/LMZ 2000 LM/LMZ 3000	320'000 255'000 225'000	130'000 105'000 80'000	40'000 32'000 28'000	35'000 28'000 25'000	h
Device hours [2]	LM/LMZ 1000 LM/LMZ 2000 LM/LMZ 3000	880'000 720'000 740'000				

[1] Calculated in accordance with MIL-HDBK-217E (calculation according to edition F would show even better results)
[2] Statistical values, based on an average of 4300 working hours per year and in general field use, over 3 years

Mechanical Data

Dimensions in mm. Tolerances ±0.3 mm unless otherwise indicated.

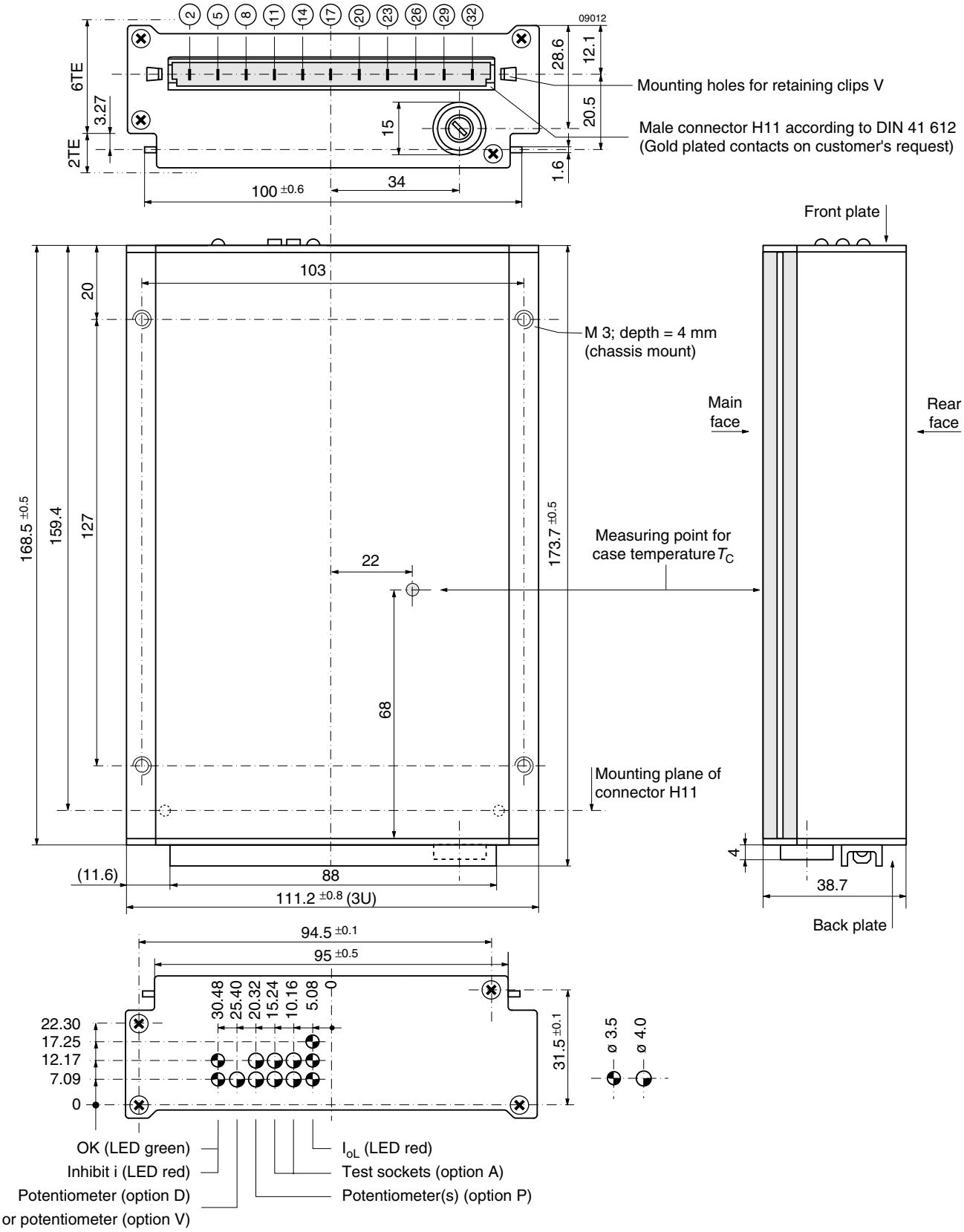

Fig. 16
AC-DC converter in case M02, weight 770 g (approx.).
Case aluminium, black finish and self cooling.

Note: Long case, elongated by 60 mm for 220 mm rack depth, is available on request.

Safety and Installation Instructions

Connector pin Allocation

The connector pin allocation table defines the electrical potentials and the physical pin positions on the H11 connector. Pin no. 26, the protective earth pin present on all LM (class I equipment) AC-DC converters is leading, ensuring that it makes contact with the female connector first.

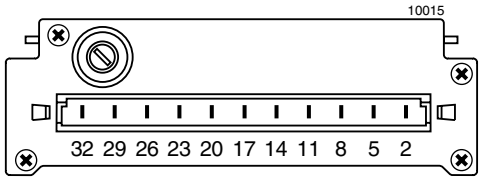

Fig. 17
View of male H11 connector

Table 15: H11 connector pin allocation

Electrical Determination	LM 1000		LMZ 1000		LM 2000		LMZ 2000		LM 3000		LMZ 3000	
	Pin	Ident	Pin	Ident	Pin	Ident	Pin	Ident	Pin	Ident	Pin	Ident
Inhibit control input	2	i	2	i	2	i	2	i	2	i	2	i
Safe data or ACFAIL	5	D or V	5	D or V	5	D or V	5	D or V	5	D or V	5	D or V
Output voltage (positive)	8	Vo1+	8	Vo1+	8		8		8	Vo3+	8	Vo3+
Output voltage (negative)	11	Vo1–	11	Vo1–	11		11		11	Vo3–	11	Vo3–
Control input + [1]	14	R	14	R								
Control input –	17	G	17	G								
Output voltage (positive)					14	Vo2+	14	Vo2+	14	Vo2+	14	Vo2+
Output voltage (negative)					17	Vo2–	17	Vo2–	17	Vo2–	17	Vo2–
Output voltage (positive)	20	Vo1+	20	Vo1+	20	Vo1+	20	Vo1+	20	Vo1+	20	Vo1+
Output voltage (negative)	23	Vo1–	23	Vo1–	23	Vo1–	23	Vo1–	23	Vo1–	23	Vo1–
Protective earthing [2]	26	⏚			26	⏚			26	⏚		
AC input voltage [3]	29	N ≈	29	N ≈	29	N ≈	29	N ≈	29	N ≈	29	N ≈
AC input voltage	32	P ≈	32	P ≈	32	P ≈	32	P ≈	32	P ≈	32	P ≈

[1] This function is not simultaneously available with option P
[2] Leading pin (pregrounding)
[3] In DC-DC operation pin 29 should be connected to the earth related potential of the input voltage

Installation Instructions

The M series AC-DC converters are components, intended exclusively for inclusion within other equipment by an industrial assembly operation or by professional installers. Installation must strictly follow the national safety regulations in compliance with the enclosure, mounting, creepage, clearance, casualty, markings and segregation requirements of the end-use application. See also: *Technical Information: Installation and Application.*

Connection to the system shall be made via the female connector H11 (see: *Accessories*). Other installation methods may not meet the safety requirements.

LM AC-DC converters (class I equipment) are provided with pin no. 26 (⏚), which is reliably connected with their case. For safety reasons it is essential to connect this pin with the protective earth of the supply system if required in: *Safety of operator accessible output circuit*.

The P≈ input (pin no. 32) is internally fused. This fuse is designed to protect the unit in case of overcurrent and may not be able to satisfy all customer requirements. External fuses in the wiring to one or both input pins (no. 30 and/or no. 32) may therefore be necessary to ensure compliance with local requirements. See also: *Input Fuse.*

Important: Whenever the inhibit function is not in use, pin no. 2 (i) should be connected to pin no. 23 (Vo1-) to enable the output(s).

Do not open the modules, or guarantee will be invalidated.

Make sure that there is sufficient air flow available for convection cooling. This should be verified by measuring the case temperature when the unit is installed and operated in the end-use application. The maximum specified case temperature $T_{C\ max}$ shall not be exceeded. See also: *Thermal Considerations.*

If the end-product is to be UL certified, the temperature of the main isolation transformer should be evaluated as part of the end-product investigation.

Cleaning Agents

In order to avoid possible damage, any penetration of liquids (e.g. cleaning fluids) is to be prevented, since the power supplies are not hermetically sealed.

Standards and approvals

LM AC-DC converters correspond to class I equipment, while LMZ types correspond to class II equipment. All types are UL recognized according to UL 1950, UL recognized for Canada to CAN/CSA C22.2 No. 950-95 and LGA approved to IEC/EN 60950 standards.

The units have been evaluated for:

- Building in,
- Supplementary insulation between input and case, based on 250 V AC and 400 V DC (class I equipment)
- Double or reinforced insulation between input and case, based on 250 V AC and DC (class II equipment)
- Double or reinforced insulation between input and output, based on 250 V AC and 400 V DC
- Operational insulation between output(s) and case
- Operational insulation between the outputs
- The use in a pollution degree 2 environment
- Connecting the input to a primary or secondary circuit with a maximum transient rating of 2500 V (overvoltage category III based on a 110 V primary circuit, overvoltage category II based on a 230 V primary circuit).

The AC-DC converters are subject to manufacturing surveillance in accordance with the above mentioned UL, CSA, EN and with ISO 9001 standards.

Isolation

The electric strength test is performed as a factory test in accordance with IEC/EN 60950 and UL 1950 and should not be repeated in the field. Power-One will not honour any guarantee/warranty claims resulting from electric strength field tests.

Important: Testing by applying AC voltages will result in high and dangerous leakage currents flowing through the Y-capacitors (see fig.: *Block diagram*).

Table 16: Isolation

Characteristic		Input to case class I	Input to case class II	Input to output class I	Input to output class II	Output to case	Output to case option H	Output to output	Unit
Electric strength test voltage	Required according to IEC/EN 60950	1.5	3.0	3.0 [1]	3.0	0.5	0.5	-	kV_{rms}
		2.1	4.2	4.2 [1]	4.2	0.7	0.7	-	kV DC
	Actual factory test 1 s	2.8	5.6	5.6 [1]	5.6	1.4	2.8	0.3	
	AC test voltage equivalent to actual factory test	2.0	4.0	4.0 [1]	4.0	1.0	2.0	0.2	kV_{rms}
Insulation resistance at 500 V DC		>300	>300	>300	>300	>300	>300	>100 [2]	MΩ

[1] In accordance with IEC/EN 60950 only subassemblies are tested in factory with this voltage.
[2] Tested at 300 V DC.

For creepage distances and clearances refer to: *Technical Information: Safety.*

Protection Degree

Condition: Female connector fitted to the unit.

IP 40: All units, except those with options P, A or K, and except those with option D or V with potentiometer.

IP 30: All units fitted with options A or K, except those with option P, and except those with option D or V with potentiometer.

IP 20: All units fitted with option P, or with option D or V with potentiometer.

Leakage Currents in AC-DC operation

Leakage currents flow due to internal leakage capacitance and RFI suppression Y-capacitors. The current values are proportional to the mains voltage and nearly proportional to the mains frequency and are specified at an input voltage of 264 V (50 Hz) where phase, neutral and protective earth are correctly connected as required for class I equipment.

Under test conditions the leakage current flows through a measuring instrument (MI) as described in fig.: *Measuring instrument for earth leakage current tests*, which takes into account impedance and sensitivity of a person touching unearthed accessible parts. The current value is calculated by dividing the measured voltage by 500 Ω. If inputs and/or outputs of M-units are connected in parallel, their individual leakage currents are added.

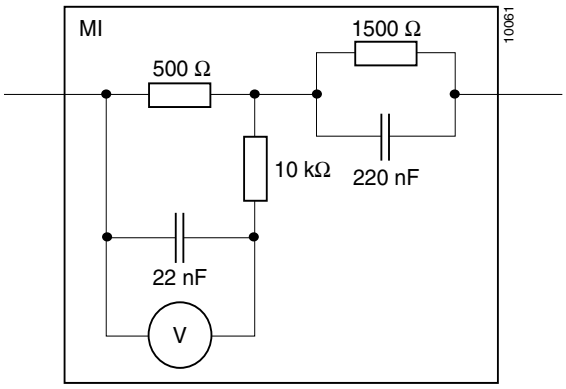

Fig. 18
Measuring instrument (MI) for earth leakage current tests according to IEC/EN 60950.

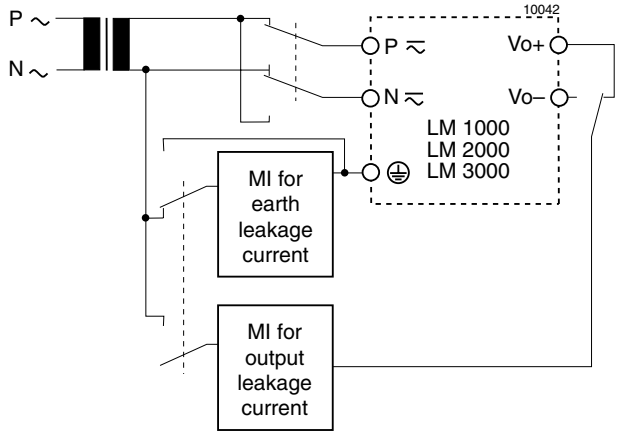

Fig. 19
Test set-up for class I equipment.

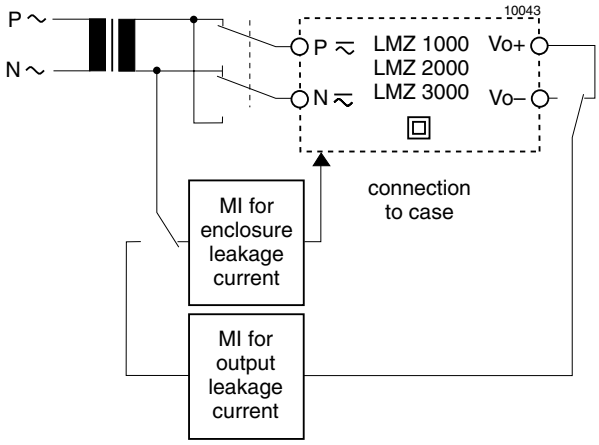

Fig. 20
Test set-up for class II equipment.

Table 17: Leakage currents

Characteristic		Class I LM 1000...3000	Class II LMZ 1000...3000	Unit
Maximum earth leakage current	Permissible according to IEC/EN 60950	3.5	-	mA
	Specified value at 264 V, 50 Hz	1.4	-	
Maximum enclosure leakage current	Permissible according to IEC/EN 60950	-	0.25	
	Specified value at 264 V, 50 Hz	-	0.03	
Maximum output leakage current	Permissible according to IEC/EN 60950	0.25	0.25	
	Specified value at 264 V, 50 Hz	0.005	0.15	

Safety of operator accessible output circuit

If the output circuit of an AC-DC converter is operator accessible, it shall be an SELV circuit according to the IEC/EN 60950 related safety standards.

The following table shows a possible installation configuration, compliance with which causes the output circuit of an M series AC-DC converter to be an SELV circuit according to IEC/EN 60950 up to a configured output voltage (sum of nominal voltages if in series or +/– configuration) of 36 V.

However, it is the sole responsibility of the installer to assure the compliance with the relevant and applicable safety regulations. More information is given in *Technical Information: Safety*.

If the M series AC-DC converters are used as DC-DC converters, please refer to the data sheet: *DC-DC converters ≤100 Watt M series.*

Table 18: Safety concept leading to an SELV output circuit

Conditions	AC-DC converter		Installation	Result
Nominal supply voltage	Converter type	Grade of insulation between input and output by the AC-DC converter	Measures to achieve the resulting safety status of the output circuit	Safety status of the AC-DC converter output circuit
Mains ≤250 V AC	LM	Double or reinforced	Earthed case [1] and installation according to the applicable standards	SELV circuit
	LMZ		Installation according to the applicable standards	

[1] The earth connection has to be provided be thge installler according to the relevant safety standards, e.g. IEC/EN 60950.

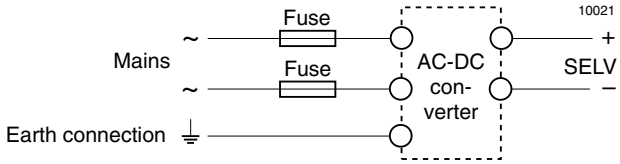

Fig. 21
Schematic safety concept. Use fuses and earth connection as per: *Installation Instructions* and table: *Safety concept leading to an SELV output circuit.*

Description of Options

Table 19: Survey of options

Option	Function of option	Characteristic
–9	Extended operational ambient temperature range	T_A = –40...71 °C
A	Test sockets at front panel for check of output voltage	U_o internally measured at the connector terminals
E	Electronic inrush current limitation circuitry	Active inrush current limitation for CM, EM, LM, CMZ, LMZ
P [1]	Potentiometer for fine adjustment of output voltage	Adjustment range ±5% of $U_{o\ nom}$, excludes R input
F	Input fuse built-in inside case	Fuse not externally accessible
H	Enhanced output to case electric strength test voltage	2000 V AC (standard: 1000 V AC)
D [2]	Input and/or output undervoltage monitoring circuitry	Safe data signal output (D0...D9)
V [2 3]	Input and/or output undervoltage monitoring circuitry	ACFAIL signal according to VME specifications (V0, V2, V3)

[1] Function R excludes option P and vice versa
[2] Option D excludes option V and vice versa
[3] Only available if main output voltage U_{o1} = 5.1 V

-9 Extended Temperature Range

Option -9 extends the operational ambient temperature range from –25...71 °C (standard) to –40...71 °C. The power supplies provide full nominal output power with convection cooling.

A Test Sockets

Test sockets (pin Ø = 2 mm, distance d = 5.08 mm) are located at the front of the module. The output voltage is sensed at the connector pins inside the module.

P Potentiometer

Optionally built-in multi-turn potentiometers provide an output voltage adjustment range of minimum ±5% of $U_{o\ nom}$ and are accessible through holes in the front cover. Compensation of voltage drop across connector and wiring becomes easily achievable. For output voltages $U_o > U_{o\ nom}$, the minimum input voltage according to: *Electrical Input Data* increases proportionally to $U_o/U_{o\ nom}$.

Note: Potentiometers are not recommended for mobile applications.

Table 20: Configuration of option A and option P

Type of option	LM/LMZ 1000	LM/LMZ 2000		LM/LMZ 3000		
	Output 1	Output 1	Output 2	Output 1	Output 2	Output 3
Potentiometer [1]	yes	yes	yes	yes	no	no
Test sockets	yes	yes	yes	yes	no	no

[1] LM/LMZ 1000 types equipped with option P do not provide the R input simultaneously, pins 14 and 17 are not connected.

F Fuse Not Accessible

The standard M units have a fuseholder containing a 5 × 20 mm fuse which is externally accessible and to be found in the back plate near the connector. Some applications require an inaccessible fuse. Option F provides a fuse mounted directly onto the main PCB inside the case.

The full self-protecting functions of the module do normally not lead to broken fuses, except if a power component inside fails (switching transistor, freewheeling diode, etc). In such cases the defective unit has to be returned to Power-One for repair.

H Enhanced Electric Strenght Test

Electric strength test voltage output to case 2800 V DC (2000 V AC) instead of 1400 V DC (1000 V AC).

E Electronic Inrush Current Limitation

The standard versions include a passive inrush current limitation in the form of an NTC resistor.

For applications which require an extended inrush current limitation, an active electronic circuit as shown in: *Option E Block diagram* has been developed. Typical inrush current waveforms of units equipped with this option are shown below.

Caution
In order to avoid overload of the series resistor R_I the on/off switching cycle should be limited to 12 s if switched on/off continuously. There should not be more than 10 start-up cycles within 20 s at a case temperature of 25 °C.

If the modules are driven by an input voltage below 100 V AC, the maximum case temperature should be derated by 10 K or the total output power should be derated by 20 %. Units driven by DC input voltages do not need to be derated within the full specified input voltage range.

Availability:
Option E is available with a nominal output power of 51 W maximum.

Table 21: Inrush current characteristics with option E

Characteristic U_i = 230 VAC		LM/LMZ typ	LM/LMZ max	Unit
$I_{inr\,p}$	Peak inrush current	6	10	A
t_{inr}	Inrush current duration	35	50	ms

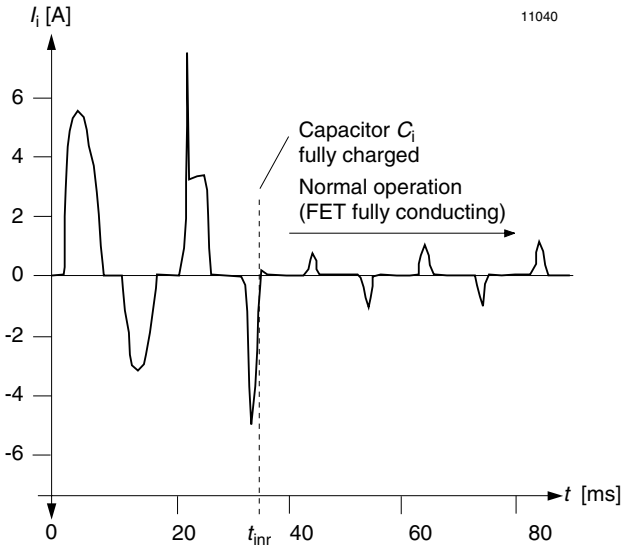

Fig. 22
Typical inrush current waveform of a LM type at U_i = 230 V AC and $I_{o\,nom}$.

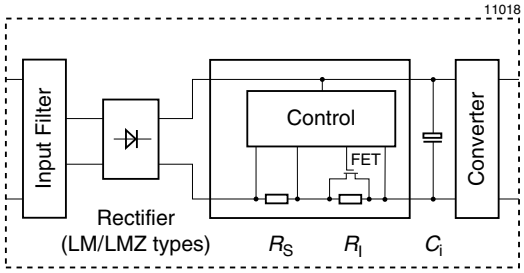

Fig. 23
Option E block diagram

D Undervoltage Monitor

The input and/or output undervoltage monitoring circuit operates independently of the built-in input undervoltage lockout circuit. A logic "low" (JFET output) or "high" signal (NPN output) is generated at pin 5 as soon as one of the monitored voltages drops below the preselected threshold level U_t. The return for this signal is Vo1– (pin 23). The D output recovers when the monitored voltage(s) exceed(s) U_t+U_h.

The threshold level U_t is either adjustable by a potentiometer, accessible through a hole in the front cover, or is factory adjusted to a fixed value specified by the customer.

Option D exists in various versions D0...D9 as shown in the following table.

Table 22: Undervoltage monitor functions

Output type JFET	Output type NPN	Monitoring U_i	Monitoring U_{o1}	Minimum adjustment range of threshold level U_t: U_{ti}	Minimum adjustment range of threshold level U_t: U_{to}	Typical hysteresis U_h for $U_{t\,min}...U_{t\,max}$ [% of U_t]: U_{hi}	Typical hysteresis U_h for $U_{t\,min}...U_{t\,max}$ [% of U_t]: U_{ho}
D1	D5	no	yes	–	3.5 V...48 V [1]	–	2.3...1
D2	D6	yes	no	$U_{i\,min}...U_{i\,max}$ [1]	–	3.0...0.5	–
D3	D7	yes	yes	$U_{i\,min}...U_{i\,max}$ [1]	0.95...0.98 U_{o1} [2]	3.0...0.5	"0"
D4	D8	no	yes	–	0.95...0.98 U_{o1} [2]	–	"0"
D0	D9	no	yes	–	3.5 V...48 V [3]	–	1.8...1
		yes	no	$U_{i\,min}...U_{i\,max}$ [3 4]	–	2.2...0.4	–
		yes	yes	$U_{i\,min}...U_{i\,max}$ [3 4]	0.95...0.98 U_{o1} [2]	2.2...0.4	"0"

[1] Threshold level adjustable by potentiometer (not recommended for mobile applications)
[2] Fixed value between 95% and 98% of U_{o1} (tracking)
[3] Fixed value, resistor-adjusted according to customer's specifications ±2% at 25°C; individual type number is determined by Power-One
[4] Adjusted at $I_{o\,nom}$

JFET output (D0…D4):

Connector pin D is internally connected via the drain-source path of a JFET (self-conducting type) to the negative potential of output 1. $U_D \leq 0.4$ V (logic low) corresponds to a monitored voltage level (U_i and/or U_{o1}) $< U_t$. The current I_D through the JFET should not exceed 2.5 mA. The JFET is protected by a 0.5 W Zener diode of 8.2 V against external overvoltages.

U_i, U_{o1} status	D output, U_D
U_i or $U_{o1} < U_t$	low, L, $U_D \leq 0.4$ V at $I_D = 2.5$ mA
U_i and $U_{o1} > U_t + U_h$	high, H, $I_D \leq 25$ µA at $U_D = 5.25$ V

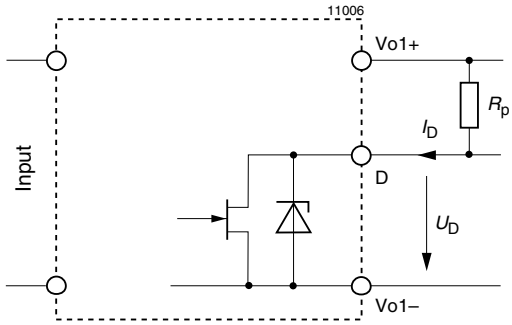

Fig. 24
Options D0...D4, JFET output

NPN output (D5...D9):

Connector pin D is internally connected via the collector-emitter path of a NPN transistor to the negative potential of output 1. $U_D \leq 0.4$ V (logic low) corresponds to a monitored voltage level (U_i and/or U_{o1}) $> U_t + U_h$. The current I_D through the open collector should not exceed 20 mA. The NPN output is not protected against external overvoltages. U_D should not exceed 40 V.

U_i, U_{o1} status	D output, U_D
U_i or $U_{o1} < U_t$	high, H, $I_D \leq 25$ µA at $U_D = 40$ V
U_i and $U_{o1} > U_t + U_h$	low, L, $U_D \leq 0.4$ V at $I_D = 20$ mA

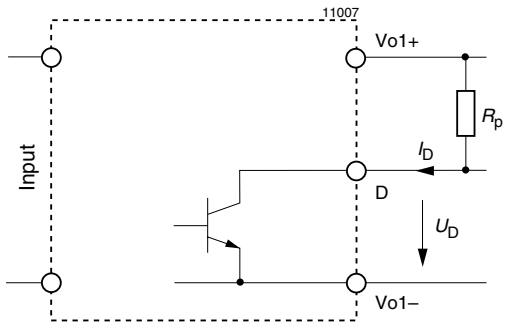

Fig. 25
Options D5...D9, NPN output

Threshold tolerances and hysteresis:

If U_i is monitored, the internal input voltage after the input filter and rectifier is measured. Consequently this voltage differs from the voltage at the connector pins by the voltage drop ΔU_{ti} across input filter and rectifier. The threshold level of the D0 and D9 options is factory adjusted at nominal output current $I_{o\ nom}$ and at T_A = 25°C. The value of ΔU_{ti} depends upon the threshold level U_t, temperature and input current. The input current is a function of the input voltage and the output power.

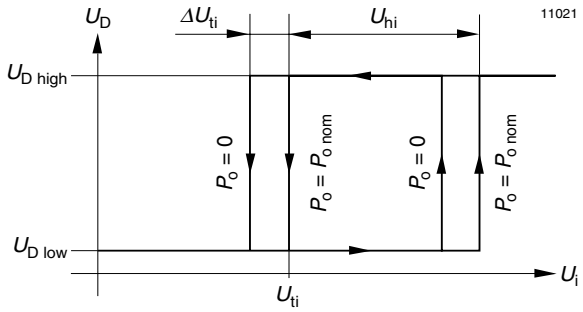

Fig. 26
Definition of U_{ti}, ΔU_{ti} and U_{hi} (JFET output)

Input voltage monitoring

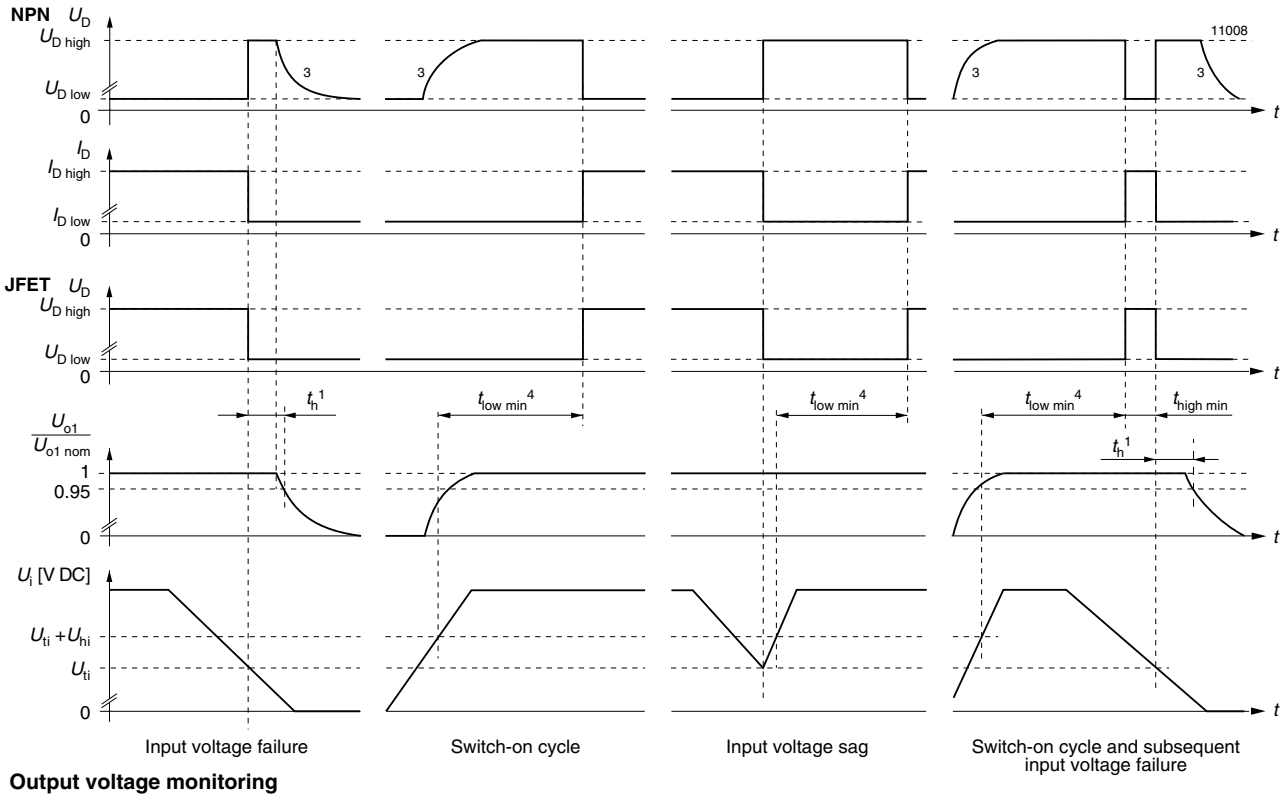

Output voltage monitoring

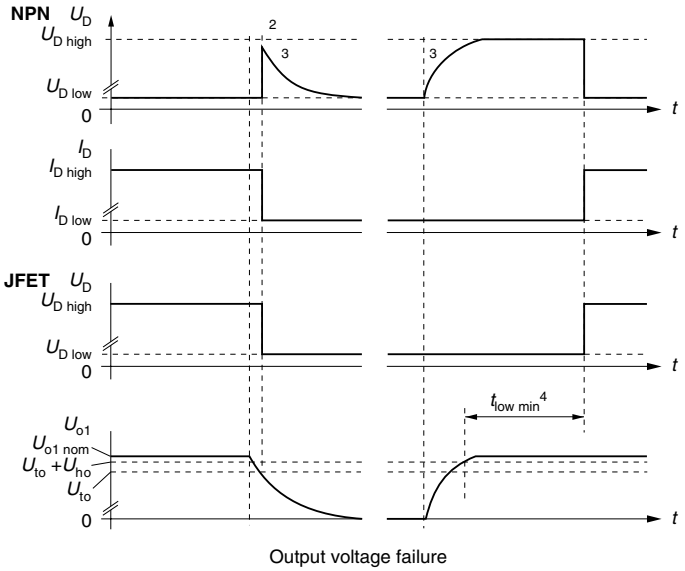

[1] See "El. output data" for hold-up time.
[2] With output voltage monitoring the hold-up time t_h = 0
[3] The D signal remains high if the D output is connected to an external source.
[4] $t_{low\ min}$ = 40...200 ms, typically 80 ms

Fig. 27
Relationship between U_i, U_{o1}, U_D, I_D and $U_{o1}/U_{o\ nom}$ versus time.

V ACFAIL signal (VME)

Available for units with U_{o1} = 5.1 V

This option defines an undervoltage monitoring circuit for the input or the input and main output voltage equivalent to option D and generates the ACFAIL signal (V signal) which conforms to the VME standard.

The low state level of the ACFAIL signal is specified at a sink current of I_V = 48 mA to $U_V \leq 0.6$ V (open-collector output of a NPN transistor). The pull-up resistor feeding the open-collector output should be placed on the VME backplane.

After the ACFAIL signal has gone low, the VME standard requires a hold-up time t_h of at least 4 ms before the 5.1 V output drops to 4.875 V when the 5.1 V output is fully loaded. This hold-up time t_h is provided by the internal input capacitance. Consequently the working input voltage and the threshold level U_t should be adequately above the minimum input voltage $U_{i\,min}$ of the converter so that enough energy is remaining in the input capacitance.

Formula for threshold level for desired value of t_h:

$$U_{ti} = \sqrt{\frac{2 \bullet P_o \bullet (t_h + 0.3\text{ ms}) \bullet 100}{C_{i\,min} \bullet \eta} + U_{i\,min}^2}$$

Table 23: Available internal input capacitance and factory potentiometer setting of U_{ti} with resulting hold-up time

Types	LM/LMZ	Unit
$C_{i\,min}$	0.14	mF
U_{ti}	120	V DC
t_h	8.18	ms

If the input voltage is below the required level, an external hold-up capacitor ($C_{i\,ext}$) should be added. If the units are AC powered, an external input capacitor cannot be applied unless an additional rectifier is provided.

Formula for additional external input capacitor

$$C_{i\,ext} = \frac{2 \bullet P_o \bullet (t_h + 0.3\text{ ms}) \bullet 100}{\eta \bullet (U_{ti}^2 - U_{i\,min}^2)} - C_{i\,min}$$

whereas:

$C_{i\,min}$ = minimum internal input capacitance [mF], according to the table below
$C_{i\,ext}$ = external input capacitance [mF]
P_o = output power [W]
η = efficiency [%]
t_h = hold-up time [ms]
$U_{i\,min}$ = minimum input voltage [V]
U_t = threshold level [V]

The threshold level U_{ti} of option V2 and V3 is adjusted during manufacture to a value according to the table below.

Option V operates independently of the built-in input undervoltage lock-out circuit. A logic "low" signal is generated at pin 5 as soon as one of the monitored voltages drops below the preselected threshold level U_t. The return for this signal is Vo1– (pin 23). The V output recovers when the monitored voltage(s) exceed(s) $U_t + U_h$. The threshold level U_t is either adjustable by a potentiometer, accessible through a hole in the front cover, or is factory adjusted to a determined customer specified value.
Versions V0, V2 and V3 are available as shown below.

Table 24: Undervoltage monitor functions

V output (VME compatible)	Monitoring U_i	Monitoring U_{o1}	Minimum adjustment range of threshold level U_t: U_{ti}	Minimum adjustment range of threshold level U_t: U_{to}	Typical hysteresis U_h [% of U_t] for $U_{t\,min}$...$U_{t\,max}$: U_{hi}	Typical hysteresis U_h [% of U_t] for $U_{t\,min}$...$U_{t\,max}$: U_{ho}
V2	yes	no	$U_{i\,min}$...$U_{i\,max}$ [1]	–	3.0...0.5	-
V3	yes	yes	$U_{i\,min}$...$U_{i\,max}$ [1]	0.95...0.98 U_{o1} [2]	3.0...0.5	"0"
V0	yes	no	$U_{i\,min}$...$U_{i\,max}$ [3 4]	-	2.2...0.4	-
	yes	yes	$U_{i\,min}$...$U_{i\,max}$ [3 4]	0.95...0.98 U_{o1} [2]	2.2...0.4	"0"

[1] Threshold level adjustable by potentiometer (not recommended for mobile applications).
[2] Fixed value between 95% and 98% of U_{o1} (tracking), output undervoltage monitoring is not a requirement of VME standard.
[3] Adjusted at $I_{o\,nom}$
[4] Fixed value, resistor-adjusted (±2% at 25°C) acc. to customer's specifications; individual type number is determined by Power-One

V output (V0, V2, V3):

Connector pin V is internally connected to the open collector of a NPN transistor. The emitter is connected to the negative potential of output 1. $U_V \leq 0.6$ V (logic low) corresponds to a monitored voltage level (U_i and/or U_{o1}) < U_t. The current I_V through the open collector should not exceed 50 mA. The NPN output is not protected against external overvoltages. U_V should not exceed 80 V.

U_i, U_{o1} status	V output, U_V
U_i or $U_{o1} < U_t$	low, L, $U_V \leq 0.6$ V at I_V = 50 mA
U_i and $U_{o1} > U_t + U_h$	high, H, $I_V \leq 25$ µA at U_V = 5.1 V

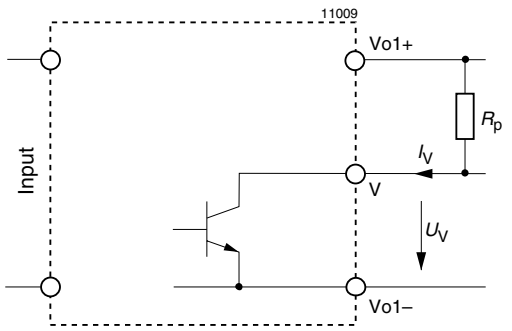

Fig. 28
Output configuration of options V0, V2 and V3

Threshold tolerances and hysteresis:

If U_i is monitored, the internal input voltage is measured after the input filter and rectifier. Consequently this voltage differs from the voltage at the connector pins by the voltage drop ΔU_{ti} across input filter and rectifier. The threshold level of option V0 is factory adjusted at $I_{o\,nom}$ and $T_A = 25°C$. The value of ΔU_{ti} depends upon the threshold level U_{ti}, temperature and input current. The input current is a function of input voltage and output power.

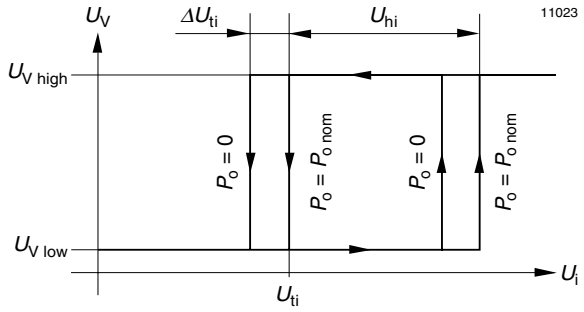

Fig. 29
Definition of U_{ti}, ΔU_{ti} and U_{hi}

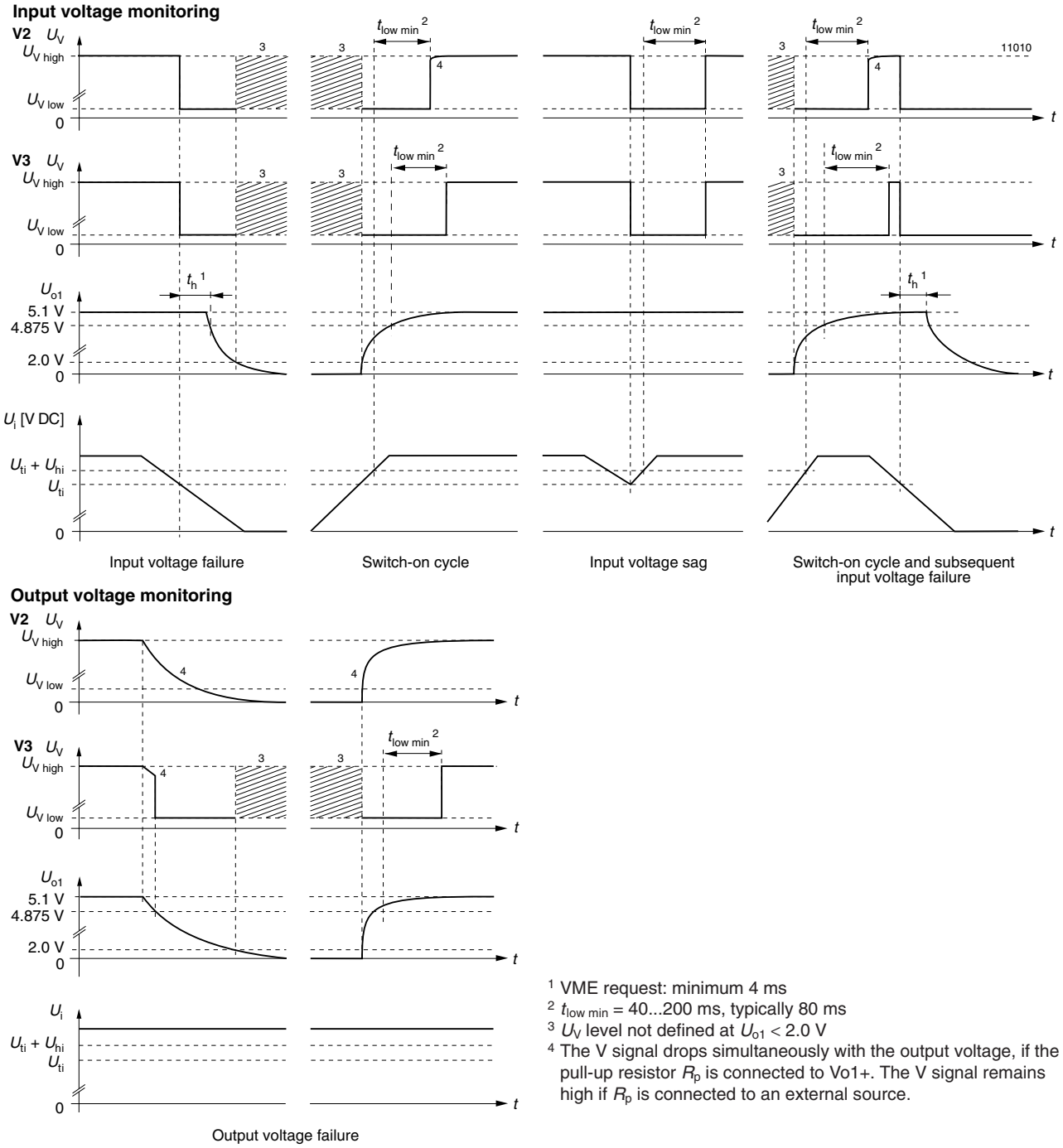

[1] VME request: minimum 4 ms
[2] $t_{low\,min}$ = 40...200 ms, typically 80 ms
[3] U_V level not defined at $U_{o1} < 2.0$ V
[4] The V signal drops simultaneously with the output voltage, if the pull-up resistor R_p is connected to Vo1+. The V signal remains high if R_p is connected to an external source.

Fig. 30
Relationship between U_i, U_{o1}, U_V, I_V and $U_{o1}/U_{o\,nom}$ versus time.

Accessories

A variety of electrical and mechanical accessories are available including:

- Front panels for 19" rack mounting, Schroff and Intermas systems.
- Mating H11 connectors with screw, solder, fast-on or press-fit terminals.
- Connector retention facilities.
- Code key system for connector coding.
- Flexible H11 PCB for mounting of the unit onto a PCB.
- Chassis mounting plates for mounting the 19" cassette to a chassis/wall where only frontal access is given.
- Universal mounting bracket for DIN-rail or chassis mounting.

For more detailed information please refer to: *Accessory Products*.

Front panels

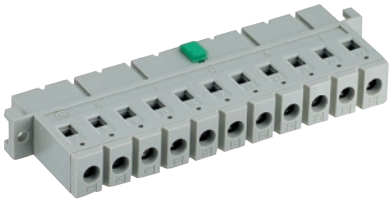

H11 female connector,
Code key system

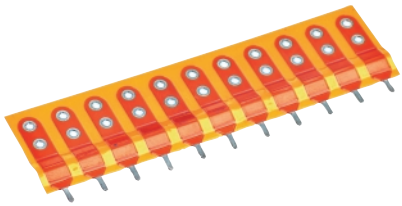

Flexible H11 PCB

Mounting plate,
Connector retention clips

Universal mounting bracket for DIN-rail mounting.