P/N OF FCII CONNECTOR	ØD (um)	FERRULE MATERIAL	BOOT COLOR	CABLE DIAMETER	CABLE TYPE
86053-0000	127	Zr	BLACK	3mm	MULTIMODE
86053-0080			RED		
86053-0300			BLACK	2.4mm	
86053-0380			RED		
86053-2000	125.5		YELLOW	3mm	SINGLE MODE
86053-2070			BLACK		
86053-2080			RED		
86053-2090			GRAY		
86053-2300			YELLOW	2.4mm	
86053-2370			BLACK		
86053-2380			RED		
86053-2390			GRAY		
86053-3000	128		BLACK	3mm	MULTIMODE
86053-3080			RED		
86053-3090			GRAY		
86053-3300			BLACK	2.4mm	
86053-3380			RED		
86053-3390			GRAY		
86053-4000	125		YELLOW	3mm	SINGLE MODE
86053-4070			BLACK		
86053-4080			RED		
86053-4300			YELLOW	2.4mm	
86053-4370			BLACK		
86053-4380			RED		
86053-5000	126		YELLOW	3mm	
86053-5070			BLACK		
86053-5080			RED		
86053-5090			GRAY		
86053-5300			YELLOW	2.4mm	
86053-5370			BLACK		
86053-5380			RED		
86053-5390			GRAY		
86053-7000	127		YELLOW	3mm	
86053-7070			BLACK		
86053-7080			RED		
86053-7300			YELLOW	2.4mm	
86053-7370			BLACK		
86053-7380			RED		
86053-8080		STAINLESS STEEL	RED	3mm	MULTIMODE
86053-8300			BLACK	2.4mm	
86053-8380			RED		

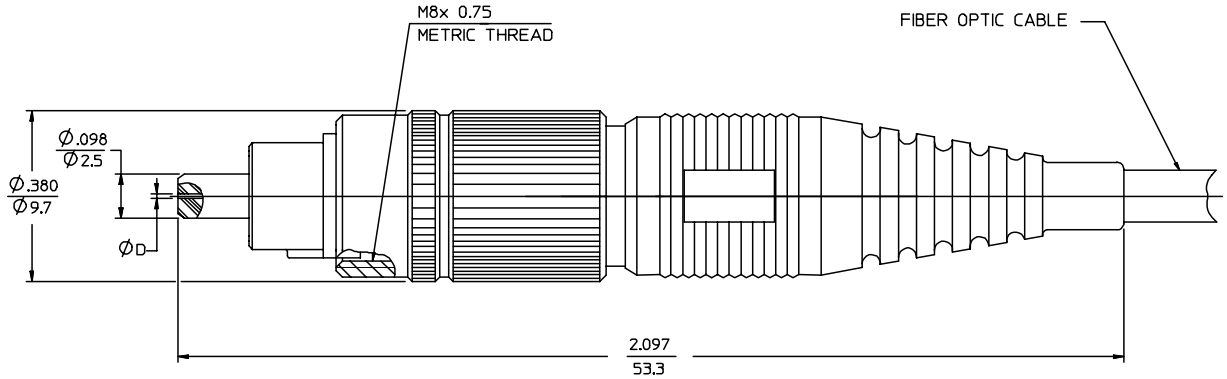

NOTE:

ALL DIMENSIONS ARE GIVEN IN $\frac{\text{INCHES}}{\text{mm}}$.

ENTER DESCRIPTION
EC NO: MF2007-0441 2007/06/11
DRWN:KPEVZNER 2007/06/11
CHKD: 2007/06/13
APPR: IGUMIN
DESCRIPTION
REV

QUALITY SYMBOLS
▼=0
(C)=0

GENERAL TOLERANCES (UNLESS SPECIFIED)

	mm	INCH
4 PLACES	± ---	± ---
3 PLACES	± ---	± ---
2 PLACES	± ---	± ---
1 PLACE	± ---	± ---
ANGULAR ±1/2°		

DRAFT WHERE APPLICABLE MUST REMAIN WITHIN DIMENSIONS

DIMENSION STYLE: IN/MM
SCALE: 5:1
DESIGN UNITS: INCH
THIRD ANGLE PROJECTION

DRAWN BY DATE
CHECKED BY DATE
APPROVED BY DATE

TITLE: FCII CONNECTOR ONE PIECE DESIGN

molex MOLEX INCORPORATED

MATERIAL NO.: SEE TABLE
DOCUMENT NO.: 86053-YYY0CD
SHEET NO.: 1 OF 1
SIZE: C

THIS DRAWING CONTAINS INFORMATION THAT IS PROPRIETARY TO MOLEX INCORPORATED AND SHOULD NOT BE USED WITHOUT WRITTEN PERMISSION

P/N OF FCII CONNECTOR	ØD (um)	FERRULE MATERIAL	BOOT COLOR	CABLE DIAMETER	CABLE TYPE
86053-0000	127	Zr	BLACK	3mm	MULTIMODE
86053-0080			RED		
86053-0300			BLACK	2.4mm	
86053-0380			RED		
86053-2000	125.5		YELLOW	3mm	SINGLE MODE
86053-2070			BLACK		
86053-2080			RED		
86053-2090			GRAY		
86053-2300			YELLOW	2.4mm	
86053-2370			BLACK		
86053-2380			RED		
86053-2390			GRAY		
86053-3000	128		BLACK	3mm	MULTIMODE
86053-3080			RED		
86053-3090			GRAY		
86053-3300			BLACK	2.4mm	
86053-3380			RED		
86053-3390			GRAY		
86053-4000	125		YELLOW	3mm	SINGLE MODE
86053-4070			BLACK		
86053-4080			RED		
86053-4300			YELLOW	2.4mm	
86053-4370			BLACK		
86053-4380			RED		
86053-5000	126		YELLOW	3mm	
86053-5070			BLACK		
86053-5080			RED		
86053-5090			GRAY		
86053-5300			YELLOW	2.4mm	
86053-5370			BLACK		
86053-5380			RED		
86053-5390			GRAY		
86053-7000	127		YELLOW	3mm	
86053-7070			BLACK		
86053-7080			RED		
86053-7300			YELLOW	2.4mm	
86053-7370			BLACK		
86053-7380			RED		
86053-8080		STAINLESS STEEL	RED	3mm	MULTIMODE
86053-8300			BLACK	2.4mm	
86053-8380			RED		

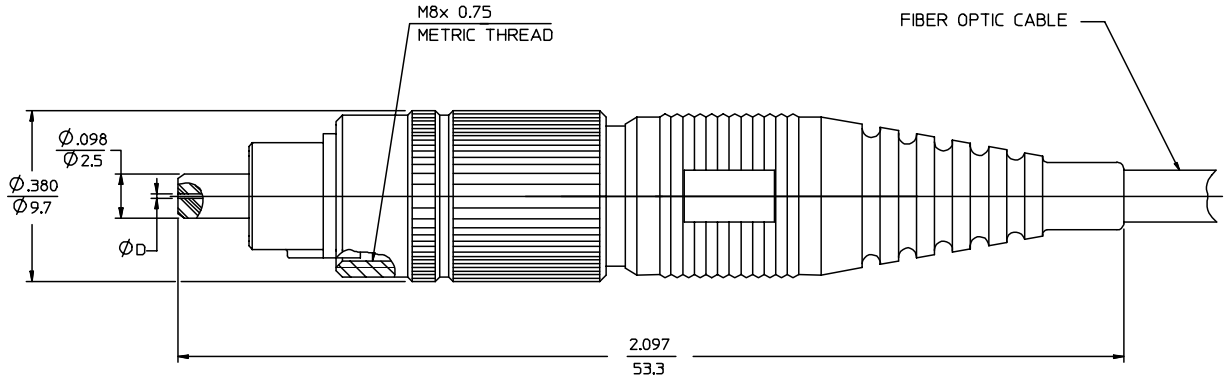

NOTE:

ALL DIMENSIONS ARE GIVEN IN $\frac{\text{INCHES}}{\text{mm}}$.

ENTER DESCRIPTION
EC NO: MF2007-0441 2007/06/11
DRWN:KPEVZNER 2007/06/11
CHKD: 2007/06/13
APPR: IGUMIN
DESCRIPTION
REV

QUALITY SYMBOLS
▼=0
(C)=0

GENERAL TOLERANCES (UNLESS SPECIFIED)

	mm	INCH
4 PLACES	± ---	± ---
3 PLACES	± ---	± ---
2 PLACES	± ---	± ---
1 PLACE	± ---	± ---
ANGULAR ±1/2°		

DRAFT WHERE APPLICABLE MUST REMAIN WITHIN DIMENSIONS

DIMENSION STYLE: IN/MM
SCALE: 5:1
DESIGN UNITS: INCH
THIRD ANGLE PROJECTION

DRAWN BY DATE
CHECKED BY DATE
APPROVED BY DATE

TITLE: FCII CONNECTOR ONE PIECE DESIGN

molex MOLEX INCORPORATED

MATERIAL NO.: SEE TABLE
DOCUMENT NO.: 86053-YYY0CD
SHEET NO.: 1 OF 1
SIZE: C

THIS DRAWING CONTAINS INFORMATION THAT IS PROPRIETARY TO MOLEX INCORPORATED AND SHOULD NOT BE USED WITHOUT WRITTEN PERMISSION