6051 Series

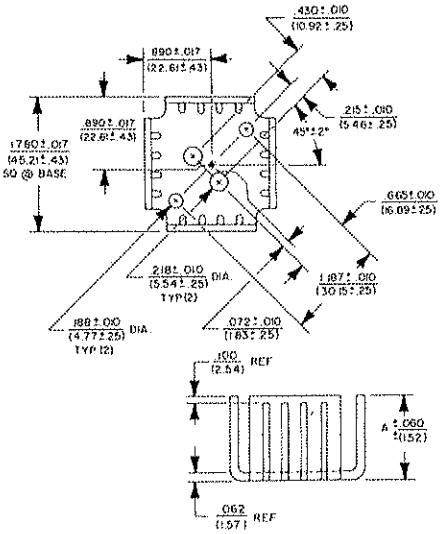

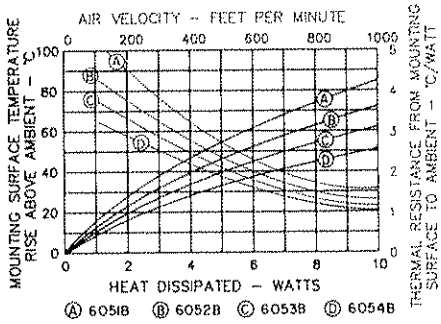

- High performance cooling for TO-3.
- Outperforms many extruded shapes.

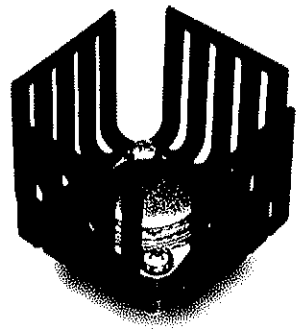

Model	Dim. A	Weight (lbs./grams)
6051B	0.50	.015 (6.80)
6052B	0.75	.022 (9.98)
6053B	1.00	.028 (12.70)
6054B	1.25	.034 (15.42)

Note: This heat sink design has been modified so that the fins are connected on the 6053 and 6054 to prevent bending. It does not change the performance or function of the heat sink.

6251 Series

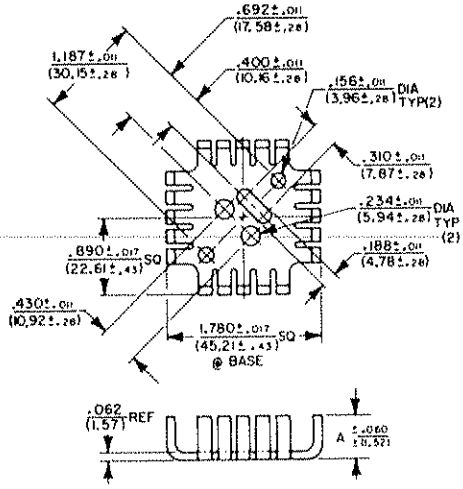

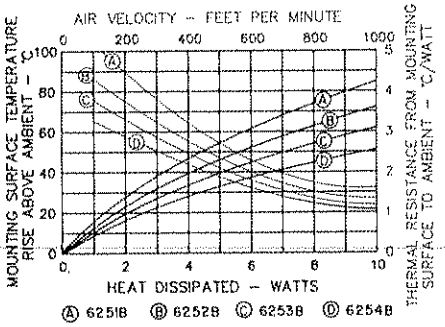

- Heat sink with universal hole pattern for 2-, 3-, and 4-lead TO-3.
- Also accepts TO-220 and other plastic power case styles.

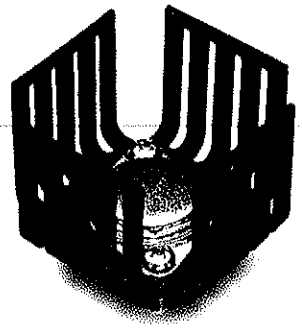

Model	Dim. A	Weight (lbs./grams)
6251B	0.50	.015 (6.80)
6252B	0.75	.022 (9.98)
6253B	1.00	.028 (12.70)
6254B	1.25	.034 (15.42)

Note: This heat sink design has been modified so that the fins are connected on the 6253 and 6254 to prevent bending. It does not change the performance or function of the heat sink.

7001, 7002

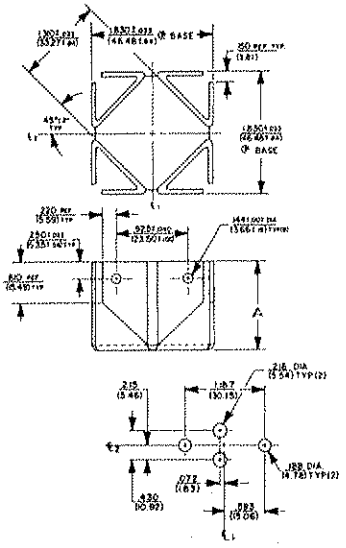

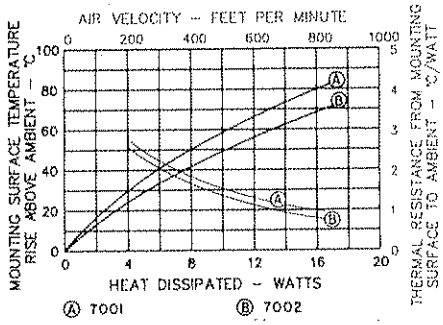

- Unique "folded" design heat sink for TO-3, TO-66, and TO-220.
- Utilizes airflow from any direction.

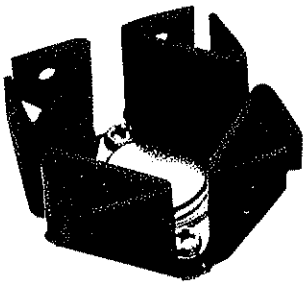

Model	Dim. A	Hole Pattern	Weight (lbs./grams)
7001B-2	1.00	TO-3	.051 (23.13)
7001B-43	1.00	Universal	.051 (23.13)
7002B-2	1.31	TO-3	.069 (31.30)
7002B-11	1.31	TO-66	.069 (31.30)
7002B-43	1.31	Universal	.069 (31.30)

Material thickness is .063 (1.60)