DRAWING MADE IN THIRD ANGLE PROJECTION

THIS DRAWING IS UNPUBLISHED. RELEASED FOR PUBLICATION ,19 .

© COPYRIGHT 19 BY AMP INCORPORATED. ALL INTERNATIONAL RIGHTS RESERVED.

LOC	DIST	P	F
AJ	16		

REVISIONS

ZONE	LTR	DESCRIPTION	DATE	APPD
	D	OBSOLETE -1 PER 0E10-0109-99	22DEC99	MO

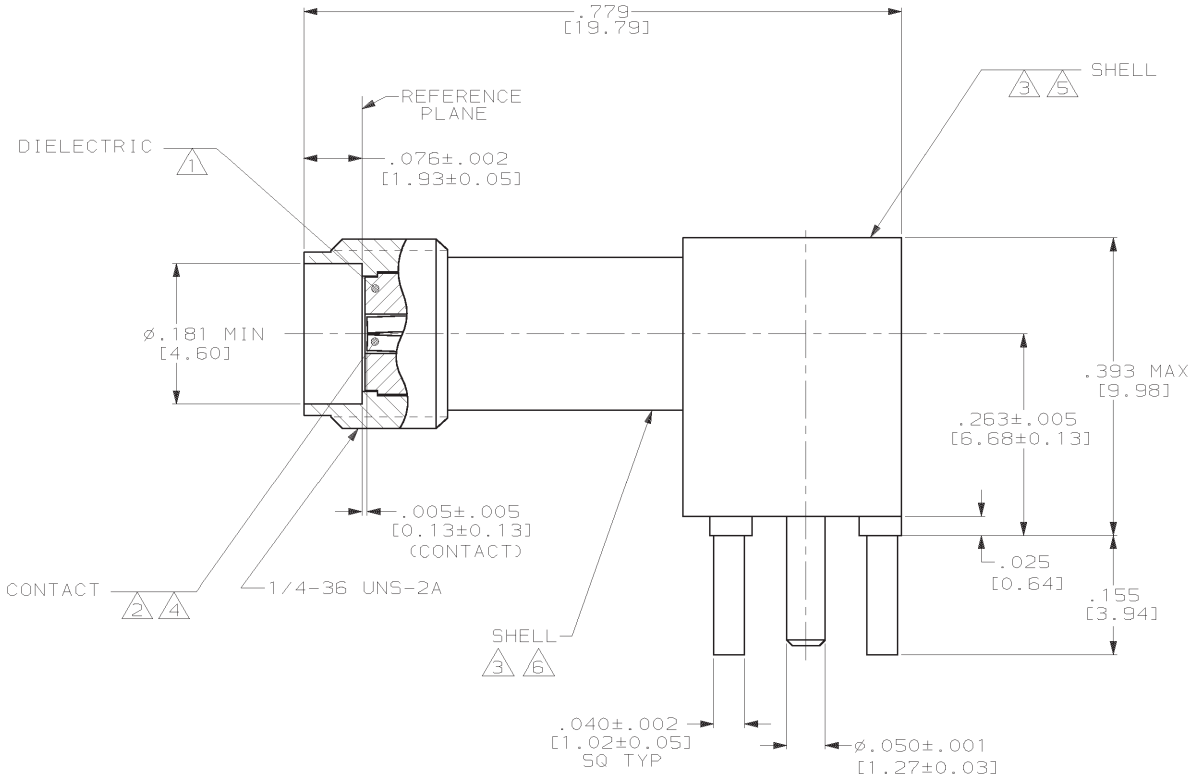

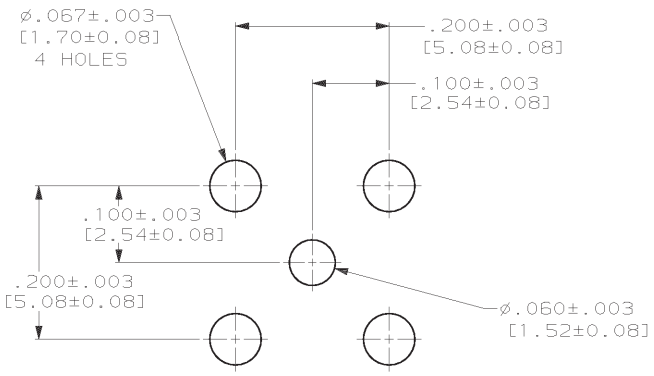

RECOMMENDED PCB HOLE PATTERN

1. PTFE PER ASTM-D-1710
2. BERYLLIUM COPPER PER ASTM-B-197
3. BRASS PER QQ-B-626
4. GOLD PL PER MIL-G-45204
5. TIN-LEAD PL PER ASTM-B-545.
6. NICKEL PL PER QQ-N-290.

OBSOLETE

SUPERSEDED BY 449709-1	449709-2
	449709-1
	PART NO

DO NOT SCALE PRINT.
UNLESS SPECIFIED
DIMENSIONS IN INCHES
TOLERANCES ON :
2 PLC DEC ± -
3 PLC DEC ± .010
ANGLES ± -

MATERIAL 1 2 3

FINISH 4 5 6

DR 11-1-94 C.C.THOMAS
CHK 11-1-94 J.CABARLO
APPD 11-1-94 J.CABARLO
APPD 11-1-94 C.C.THOMAS

PRODUCT SPEC -

APPLICATION SPEC -

WEIGHT -

AMP Incorporated
Harrisburg, PA 17105-3608

NAME
JACK, RIGHT ANGLE, PCB, SERIES SMA

OBSOLETE

SIZE	CAGE CODE	DRAWING NO
C	00779	C-449709
SCALE 8:1		SHEET 1 OF 1

THIS DRAWING IS A CONTROLLED DOCUMENT FOR AMP INCORPORATED. IT IS SUBJECT TO CHANGE AND THE CONTROLLING ENGINEERING ORGANIZATION SHOULD BE CONTACTED FOR THE LATEST REVISION.

AMP 1471-6 REV 3-92

CUSTOMER DRAWING

449709

03-MAR-00 13:46:20 amp06572 /home/amp06572/edmmod