SYMBOL DEFINITION			MISSING SYMBOLS
A DIMENSION WITHOUT AN INSPECTION REPORT SYMBOL ( ) DOES NOT REQUIRE INSPECTION. IT MAY BE CONTROLLED ON THE INDIVIDUAL COMPONENT DRAWING.	TOTAL NO OF INSPECTIONS REQUIRED	28	NO MISSING SYMBOL NUMBER
	LAST NO. USED	24	

DWG STATUS DATE	STG	REV	N/P	CHG	ZONE	REVISION HISTORY	AUTH	DR	APVD 1	APVD 2
20MR02	R	D2	-	-		REDRAWN TO PART DRAWING: ADDED OPTIONAL CONSTRUCTION: MATERIAL WAS R0071769	222468	CJP	CJP	CLD
19OC05	R	D3	-	-		ADDED LABEL AND NOTE #6	273041	CCV	AUG	MLP
23MR07	R	D4	-	-		UPDATED PDM ATTRIBUTES	400945	EFS	FRG	GGI

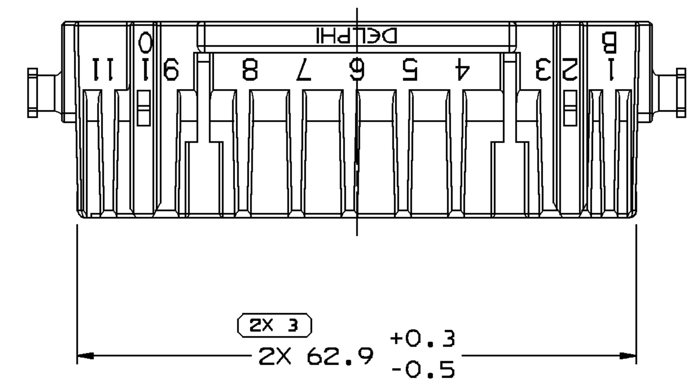

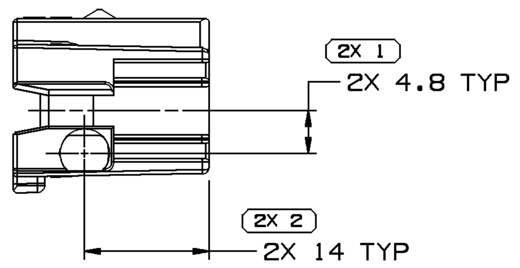

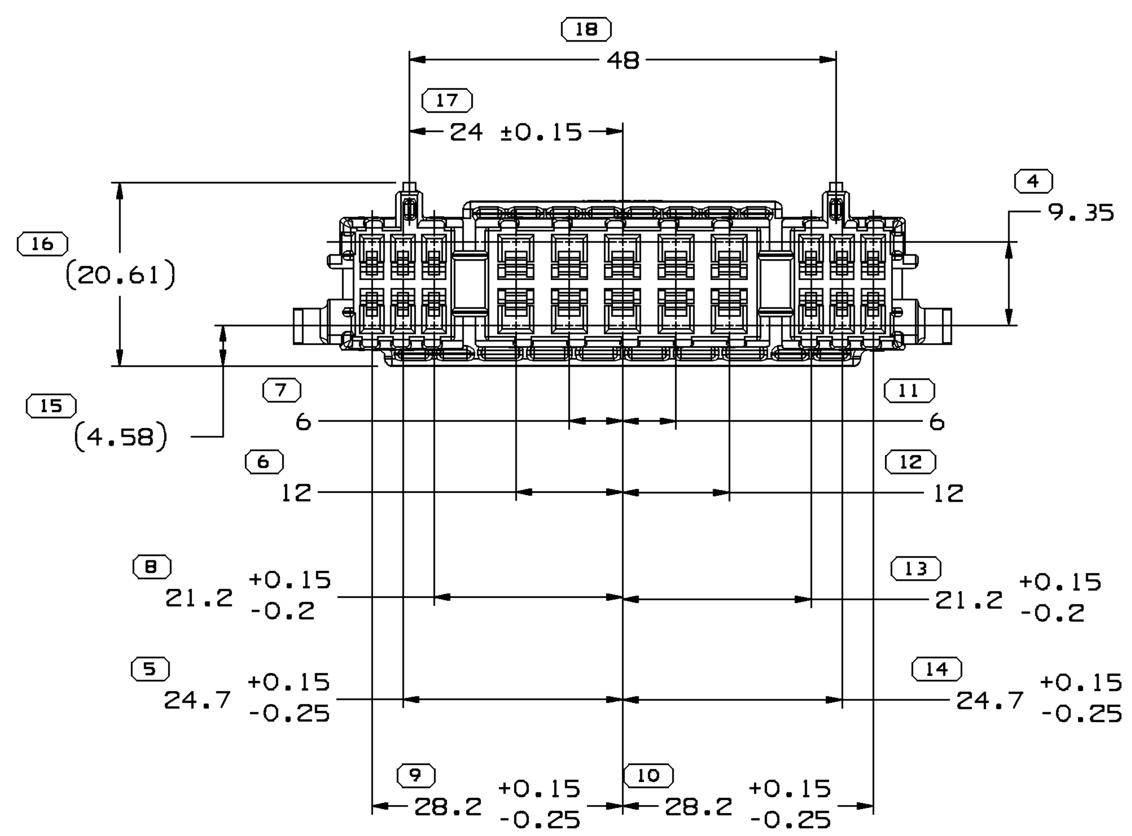

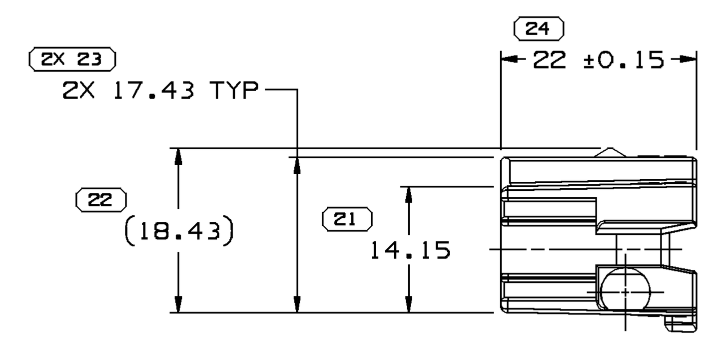

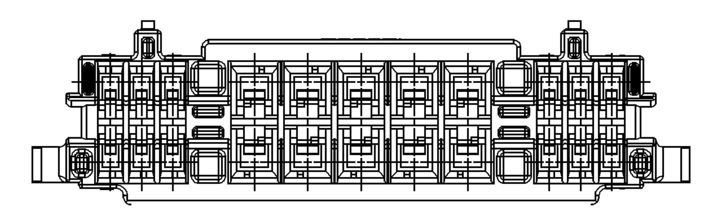

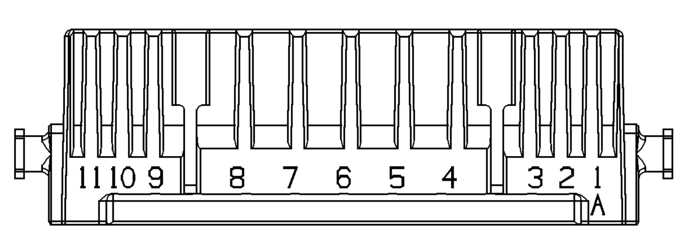

OPTIONAL CONSTRUCTION
(PREFERRED)

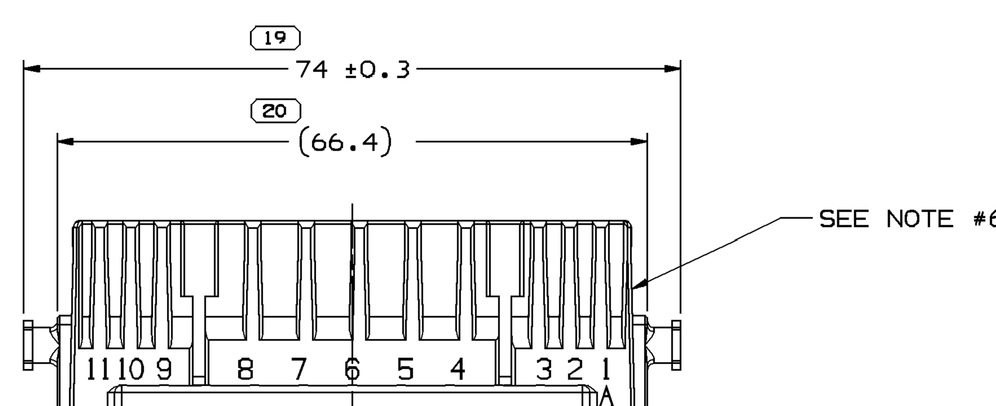

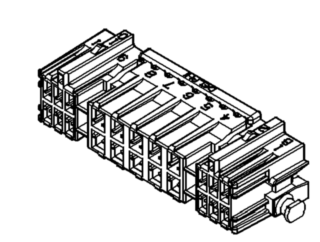

NOTES

1. UNLESS OTHERWISE SPECIFIED AND/OR INDICATED:

   DIMENSIONS ARE TO FACE OF VIEW SHOWN AND AUTOMATICALLY ROUNDED BY COMPUTER FOR INSPECTION (SEE MATH MODEL FOR PRECISE DIMENSIONS). FOR ALL OTHER DIMENSIONS NOT SHOWN BUT REQUIRED FOR TOOL BUILD, SEE MATH MODEL FOR PRECISE TOOL PATH DATA.

2. THIS PART ACCEPTS THE FOLLOWING COMPONENTS OR EQUIVALENT:

   TERMINALS-
   CAVITIES A1,A2,A3,A9,A10,A11 & B1,B2,B3,B9,B10,B11
   USE 12191801 OR 12160912 GT 150 TERMINAL OR EQUIVALENT
   MAX INSULATION CRIMP MUST BE LESS THAN 3.15 HIGH AND 2.8 WIDE.
   CAVITIES A4,A5,A6,A7,A8 & B4,B5,B6,B7,B8
   USE 12176545, 12176546 OR 12176547 GT 280 TERMINAL OR EQUIVALENT
   MAX INSULATION CRIMP MUST BE LESS THAN 3.65 HIGH AND 5.2 WIDE.
   GT 280 CAVITIES ACCEPT 1/1 MM^2 MAXIMUM DOUBLE CABLES.
   TERMINAL POSITION ASSURANCE LOCK 15317326

3. THIS CONNECTOR IS THIN STOCK TERMINAL SENSITIVE.

4. (1.6)X(0.1)RAISED DELPHI CORPORATE BRAND TO BE LOCATED ON ANY EXTERIOR SURFACE, PREFERABLY VISIBLE AT FINAL ASSEMBLY. OPTIONAL CONSTRUCTION TO BE "PED" OR NO LOGO.

5. MATERIAL RECYCLING CODE PER ISO 11469. (2.3)X(0.1) RAISED CHARACTERS AS SHOWN TO BE LOCATED ON ANY EXTERIOR SURFACE. OPTIONAL CONSTRUCTION TO BE NO MATERIAL RECYCLING CODE.

6. MATERIAL DISCOLORATION IS ACCEPTABLE IN THIS AREA (4 PLCS). DISCOLORATION DOES NOT IMPACT PRODUCT FIT OR FUNTION.

(N/A) PROCESS SENSITIVE DIMENSION

DIMENSIONS ENCLOSED IN ( ) INDICATE REFERENCE DIMENSIONS AND NO TOLERANCE LIMITS ARE ESTABLISHED

DIMENSIONAL RANGE (MM)									CHART E1
FROM / TO	> 0 / 20	> 20 / 30	> 30 / 70	> 70 / 100	>100 / 150	>150 / 200	>200 / 250	>250 / 300	>300 / 400
TOLERANCE UNLESS OTHERWISE SPECIFIED	±0.15	±0.2	±0.3	±0.4	±0.5	±0.6	±0.8	±1	±1.2

ANGULAR TOLERANCE ±2°

DWG TYPE: PART DRAWING

STYLE

VOLUME (CM³): 10.309 | DISTR CODE: D

UNLESS OTHERWISE SPECIFIED

THIS DOCUMENT IS IN ACCORDANCE WITH ASME Y14.5M-1994 AS AMENDED BY THE GM GLOBAL DIMENSIONING AND TOLERANCING ADDENDUM - 1997. ALL GEOMETRIC TOLERANCES AND RELATED DATUMS APPLY RFS. RULE #1(PERFECT FORM AT MMC) DOES NOT APPLY WHEN RELATIONSHIP BETWEEN FEATURES IS ESTABLISHED BY ORIENTATION OR LOCATION TOLERANCES. SEPARATE POSITION CALLOUTS MAY BE GAGED SEPARATELY, REGARDLESS OF DATUM REFERENCE.

ALL DIMENSIONS ARE IN MILLIMETERS

REFERENCE

THIRD ANGLE PROJECTION | DO NOT SCALE | USE MATH DATA | CAD | UNIGRAPHICS

DELPHI

DELPHI PACKARD ELECTRICAL/ELECTRONIC ARCHITECTURE
WARREN, OH

		DATE
DR		
APVD1	JUAN M.CANO	05N096
APVD2	W.TURNBULL	05N096
APVD3	J. GRIFFIN	20N096
APVD4		
APVD5		

SUBSTANCES OF CONCERN AND RECYCLED CONTENT PER DELPHI-A 10949001

MATERIAL: M3592012 PA66 HS IM GRA LT

DRAWING NAME: CONN 22 F GT 150 280

DRAWING NUMBER: 15317325

SIZE	SCALE	FRAME NO	SHEET NO	STG	REV	N/P
A0	2:1	1 OF 1	1 OF 1	R	D4	-

User: jzvxl5 Part: 15317325-CUS01-S01 Date: 23-Apr-07 Time: 11:08 Message: