DRAWING MADE IN THIRD ANGLE PROJECTION

THIS DRAWING IS UNPUBLISHED. RELEASED FOR PUBLICATION ,19 .
© COPYRIGHT 19 BY AMP INCORPORATED. ALL INTERNATIONAL RIGHTS RESERVED.

| LOC | DIST |
|---|---|
| AF | 50 |

| REVISIONS | | | | |
|---|---|---|---|---|
| ZONE | LTR | DESCRIPTION | DATE | APPD |
| | L | REV PER 0G3A-0266-00 | 27APR00 | JR/PD |

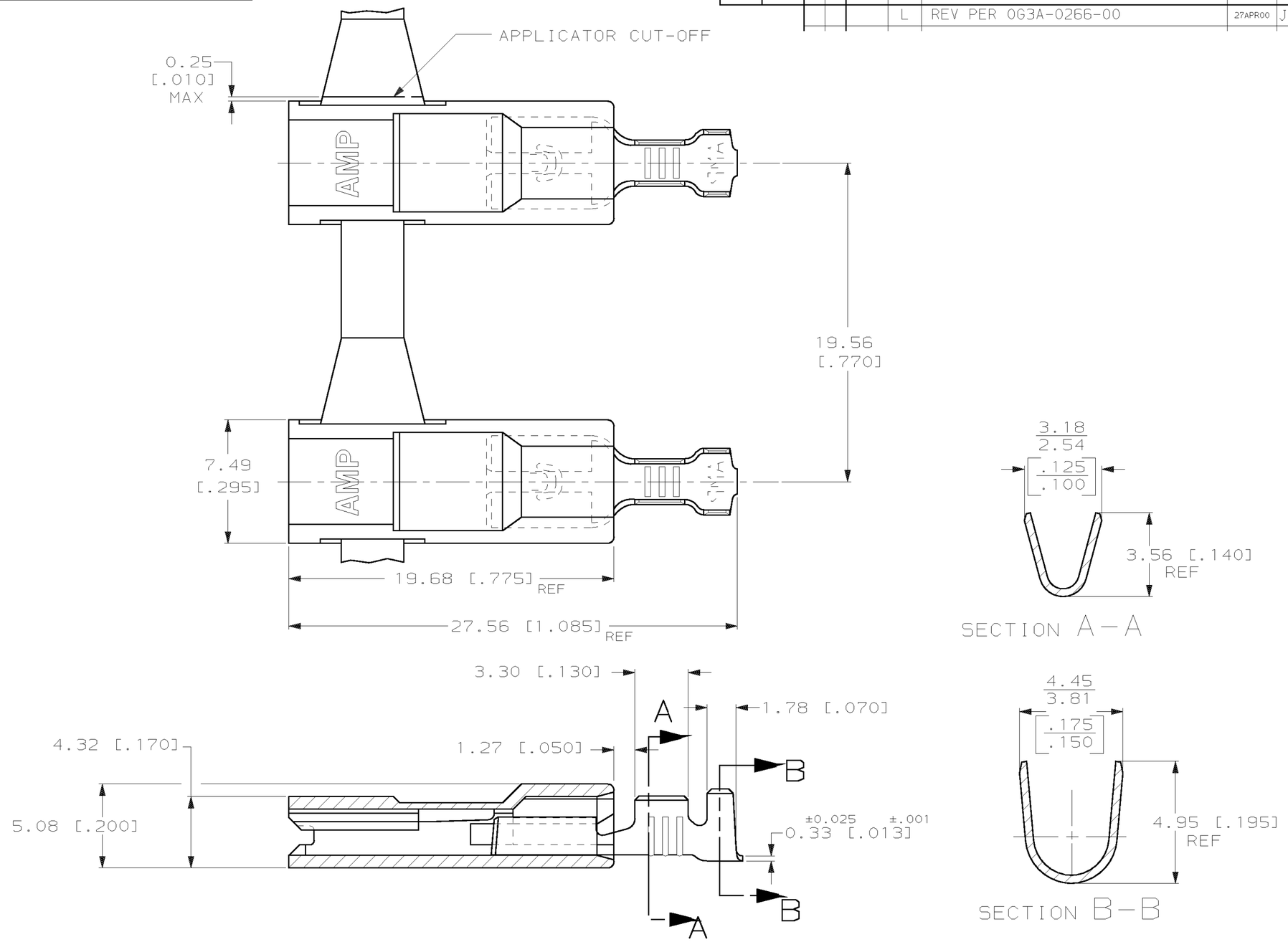


1 FASTON TERMINALS, BASE P/N 63653, ARE USED IN THIS PRODUCT.

2 TIN PLATE PER MIL-T-10727 .002032 [.000080] MIN.

| PACKAGING | TERMINAL FINISH | INSULATION RANGE | WIRE SIZE | MATING TAB THK ±0.025 [±.001] | PART NO |
|---|---|---|---|---|---|
| BULK | TIN 2 | 2.29-3.30 [.090-.130] DIA | 0.5-1.3 mm² [20-16] | 0.508 [.020] | 5-520973-2 |
| BULK | PLAIN | | | | 5-520973-1 |
| STANDARD | TIN 2 | | | | 520973-2 |
| STANDARD | PLAIN | | | | 520973-1 |

DO NOT SCALE PRINT.
UNLESS SPECIFIED
DIMENSIONS IN mm [INCHES]
TOLERANCES ON :
2 PLC DEC ± -
3 PLC DEC ± 0.25 [.010]
ANGLES ± -

MATERIAL
TERMINAL - H04 BRASS
HOUSING - 6/6 NYLON

FINISH
TERMINAL - SEE TABLE
HOUSING - NATURAL

DR 3/20/90 JR RUTH
CHK 3/20/90 MS FEHER
APPD 3/20/90 D FRANTZ
APPD 3/20/90 R KUZO

PRODUCT SPEC 118-1285
APPLICATION SPEC 114-2124
WEIGHT _

AMP INCORPORATED
Harrisburg, Pa. 17105

NAME
ASSEMBLY, RECEPTACLE,
ULTRA-POD, 4.8 [.187] SERIES

SIZE C | CAGE CODE 00779 | DRAWING NO 520973
SCALE 5:1 | SHEET 1 OF 1

METRIC

CUSTOMER DRAWING

AMP 1471-6 REV 6-89

27-APR-00 07:45:13 amp13469 /home/amp13469/edmmod