File No.	060	SHEET	1 /1

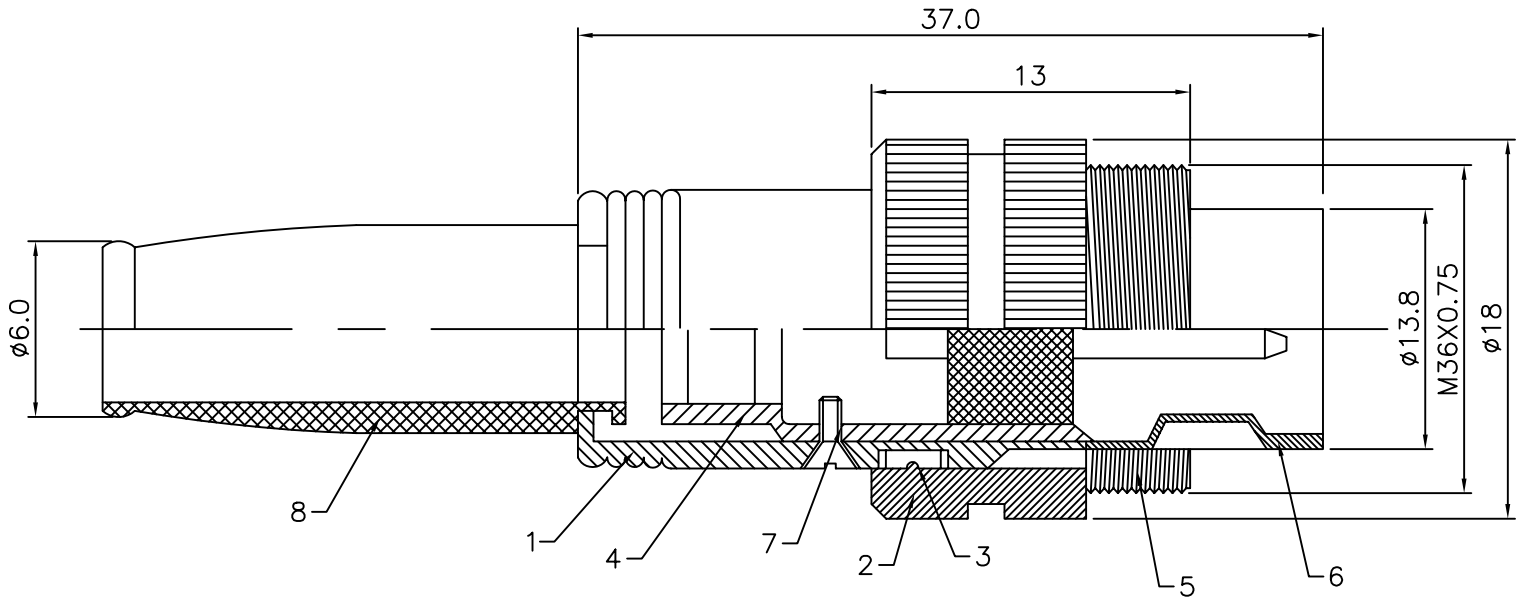

Item	Name	Material	Finish
8	SR	PVC	
7	Screw	Metal	Nickel Plated
6	Pin	Brass	Nickel Plated
5	Housing	Plastic	PA
4	Clip	Metal	Nickel Plated
3	Spring	Steel	Nickel Plated
2	Metal Screw	Brass	Nickel Plated
1	Metal Body	Brass	Nickel Plated

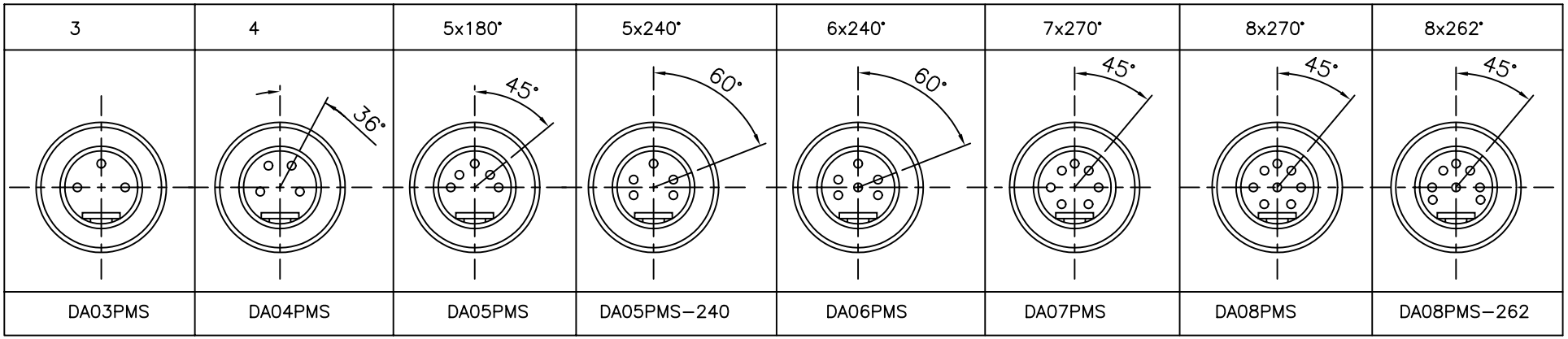

A MEMBER OF AUK GROUP
太聯事業股份有限公司
AUK CONTRACTORS CO., LTD.

CATEGORY		APPROVED BY	MEI
PART No.	DAXXPMS	CHECKED BY	BECKY
DRAWING No.	DAXXPMS	DRAWING BY	HZF
SCALE	NONE	REV.	A0

UNLESS OTHERWISE SPECIFIED TOLERANCES ARE
.X ±0.38
.XX ±0.25
.XXX
UNIT mm

NO.	REV.	REVISIONS	CHK	DATE
0	A0	NEW RELEASE		