Single Channel Transceivers

Transformer Requirements:

The NHI-15XX series of single channel transceivers require a transformer in order to couple to the Mil-Std-1553 Bus.

The turns ratios required for both Direct and Transformer Coupling for each device type, and the corresponding Technitrol part numbers Q1553-X are outlined in the table below.

The center tap on the transceiver side of the isolation transformer must be grounded.

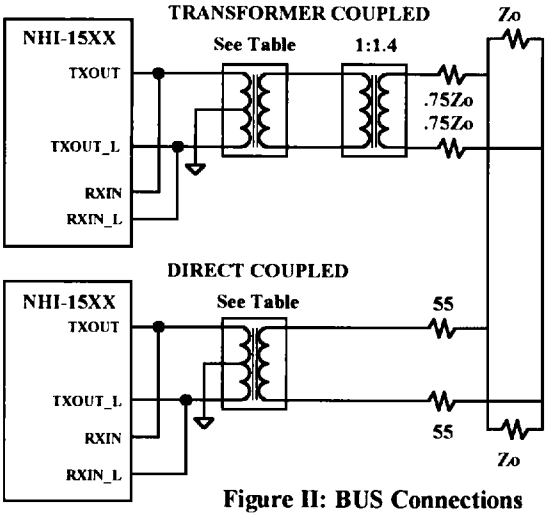

Figure II: BUS Connections

Device	Power Supply +V	Transformer Turns Ratio Direct	Transformer Turns Ratio Stub	Technitrol Part Number	DESC SMD
NHI-1508	+15V	1.40:1.00	2.00:1.00	Q1553-2	
NHI-1509	+15V	1.40:1.00	2.00:1.00	Q1553-2	5962-8604906
NHI-1510	+15V	1.40:1.00	2.00:1.00	Q1553-2	
NHI-1531	+12V	1.25:1.00	1.66:1.00	Q1553-3	5962-9082905
NHI-1534	+5V Only	1.00:2.12	1.00:1.50	Q1553-5	
NHI-1535	+5V Only	1.00:2.12	1.00:1.50	Q1553-5	
NHI-1545	+12V	1.25:1.00	1.66:1.00	Q1553-3	5962-9082906

Single Channel Transceivers

+5V Only Device Pin Functions			
Pin#	Function	Pin#	Function
1	TXOUT	24	NC
2	TXOUT L	23	TX L
3	GND	22	TX
4	NC	21	TXINH
5	NC	20	+5V
6	NC	19	NC
7	RX	18	GND
8	RXENA	17	NC
9	GND	16	RXIN L
10	RX L	15	RXIN
11	NC	14	NC
12	NC	13	NC

+15V & +12V Device Pin Functions			
Pin#	Function	Pin#	Function
1	TXOUT	24	NC
2	TXOUT L	23	TX L
3	GND	22	TX
4	NC	21	TXINH
5	NC	20	+5V
6	NC \1	19	NC
7	RX	18	GND
8	RXENA	17	NC
9	GND	16	RXIN L
10	RX L	15	RXIN
11	NC	14	NC
12	NC	13	+V

\1 Control voltage input TXVOC for NHI-1508 variable transmitter output transceiver.

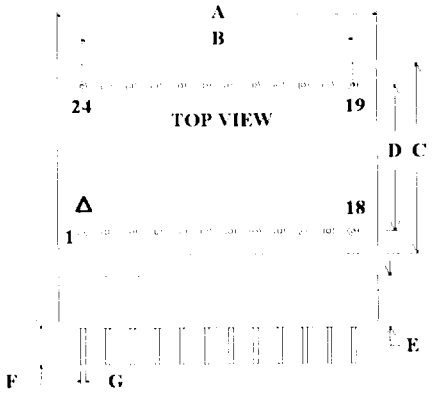

24 Pin Plug-In Package Detail

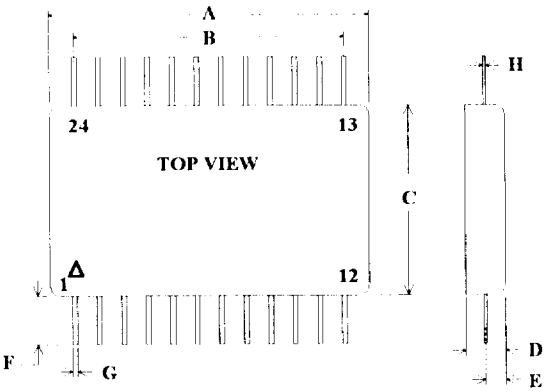

24 Pin Flatpack Package Detail

24 Pin Plug-In Dimensions		
DIM	TYP (Inches)	TOL (+/- Inches)
A	1.270 "	0.010 "
B	11 EQ SP @	0.100 = 1.700 "
C	0.770 "	0.010 "
D	0.600 "	0.010 "
E	0.215 "	MAX
F	0.175 "	MIN
G	0.018 " DIA.	0.002 "

24 Pin Flatpack Dimensions		
DIM	TYP (Inches)	TOL (+/- Inches)
A	1.275 "	0.010 "
B	11 EQ SP @	0.100 =1.100 "
C	0.775 "	0.010 "
D	0.175 "	MAX
E	0.072 "	0.010 "
F	0.500 "	MIN
G	0.015 "	0.003 "
H	0.010 "	0.002 "

Single Channel Transceivers

Ordering Information:

NHI-1508 FP / 883

Reliability Grade

- **883** = **Fully Compliant with Mil-Std-883**
- **M** = **Military, -55 to +125 °C**
- **Blank** = **Industrial, -25 to +85 °C**

Package Style

- **Blank** = **Plug-In**
- **FP** = **Flatpack**

Decoder Compatibility

- **08** = **+15V, Variable Output, RX & RX_L, Standby = Logic 0**
- **09** = **+15V, RX & RX_L, Standby = Logic 0**
- **10** = **+15V, RX & RX_L, Standby = Logic 1**
- **31** = **+12V, RX & RX_L, Standby = Logic 0**
- **34** = **+5V, RX & RX_L, Standby = Logic 0**
- **35** = **+5V, RX & RX_L, Standby = Logic 1**
- **45** = **+12V, RX & RX_L, Standby = Logic 1**

See QML-38534 for NHI's Manufacturer Qualification Under Mil-H-38534

REV1508-940916

NATIONAL HYBRID, INC.

2200 Smithtown Avenue, Ronkonkoma, NY 11779

(516) 981-2400 FAX 516-981-8888

NATIONAL HYBRID, INC.
2200 Smithtown Avenue, Ronkonkoma, NY 11779
(516) 981-2400 FAX 516-981-2445 Sales FAX 516-981-8888

Mil-Std-1772
Certified & Qualified

Mil-Std-1553 Products
NHI-1500 Series
+15V Dual Transceivers

Features/Applications:

- Very Low Standby Power
- Low Thermal Resistance
- Totally Isolated Channels
- Short Circuit Proof
- Superior Noise Performance
- Screened to Mil-H-38534

Description:

The NHI +15V dual transceivers are available in 1.900" x .780", 36 pin plug-in and flatpack packages.

Each receiver converts the 1553 bus bi-phase data to complementary RX and RX_L TTL digital outputs for use by the manchester decoder. The device provides independent receiver enables for each channel. Devices are available with receiver outputs normally HIGH or LOW during standby mode for compatibility with industry standard decoders.

The transmitters will output bi-phase manchester to the coupling transformer when the TX and TX_L inputs are driven by complementary TTL digital data. The device provides an independent transmitter inhibit TXINH for each channel.

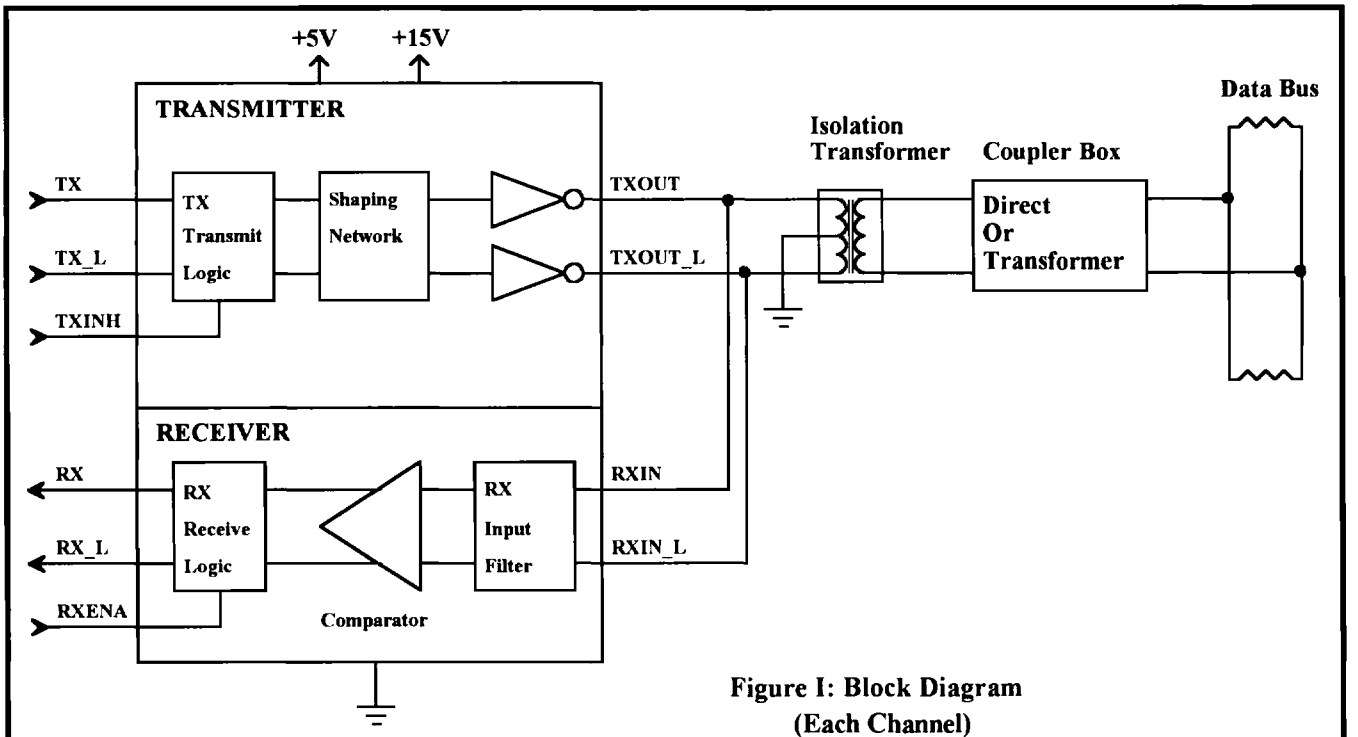

Figure I: Block Diagram
(Each Channel)