REVISIONS			DWG. NO.	SH	REV.
ZONE	LTR	DESCRIPTION	DATE	APPROVED	

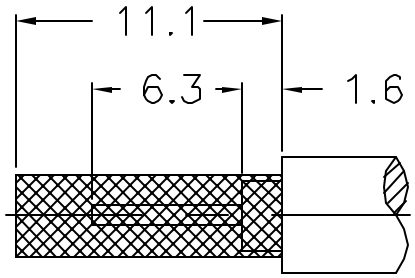

RECOMMENDED
CABLE STRIPPING DIM'S

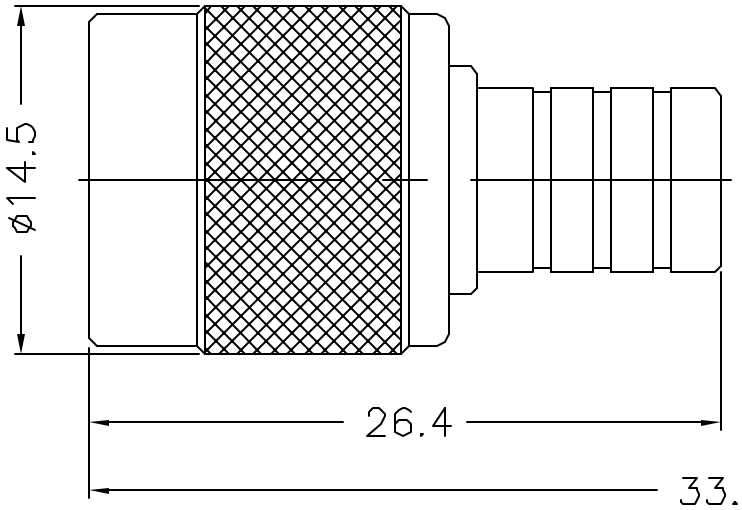

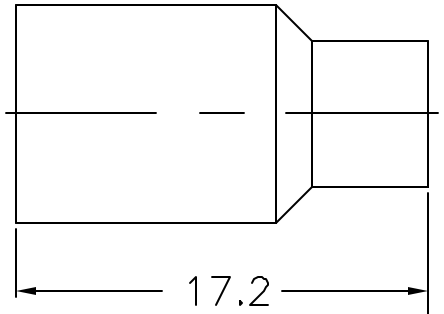

(AFTER ASSEMBLY)

	DESCRIPTION	MATERIAL	FINISH	QTY
1	BODY	BRASS	NICKEL	1
2	INSULATOR	DELRIN	NATURAL	1
3	CONTACT PIN	BRASS	GOLD	1
4	FERRULE	BRASS	NICKEL	1

DIMENSIONS ARE IN MILLIMETERS
UNLESS OTHERWISE SPECIFIED TOLERANCES ARE:
0.5–6 = ± 0.2
6–30 = ± 0.4
30–120 = ± 0.6
120–315 = ± 1
315–1000 = ± 1.6
1000–2000 = ± 2.4
DO NOT SCALE DRAWING

APPROVALS		DATE
DRAWN	B. BURTON	5/21/96
CHECKED		
ISSUED		

Connector Corporation

TITLE TNC STRAIGHT CRIMP PLUG–SINGLE CRIMP FOR RG 58, 140, 141, 142 CABLE

SIZE	FSCM NO.	DWG. NO.	REV.
A	99001	122100.DWG	

SCALE 3.5:1 PART NO. 122100 SHEET 1 OF 1