This document was generated on 02/01/2022

PLEASE CHECK WWW.MOLEX.COM FOR LATEST PART INFORMATION

Part Number: 0496160711

Status: Active

Overview: HSAutoLink Interconnect Systems

Description: 0.80mm Pitch HSAutoLink Right-Angle Header, Through Hole, 5 Circuit, Type A, Black USB

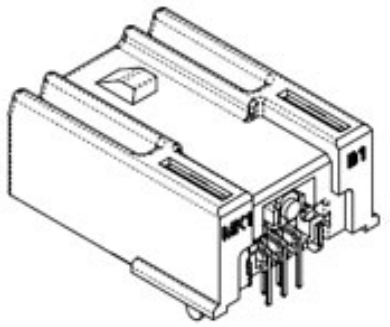

Series image - Reference only

Documents:

3D Model
3D Model (PDF)
Drawing (PDF)
Product Specification PS-49616-001-001 (PDF)
Packaging Specification PK-49616-001-001 (PDF)
Datasheet (PDF)
RoHS Certificate of Compliance (PDF)

General

Product Family	PCB Headers
Series	49616
Application	Automotive, Signal, Wire-to-Board
Comments	Higher current rating achievable, please contact PM for additional technical information.
Overview	HSAutoLink Interconnect Systems
Product Name	HSAutoLink
UPC	883906124670

Physical

Breakaway	No
Circuits (Loaded)	5
Circuits (maximum)	5
Color - Resin	Black
Durability (mating cycles max)	25
First Mate / Last Break	No
Glow-Wire Capable	No
Guide to Mating Part	No
Keying to Mating Part	None
Lock to Mating Part	Yes
Material - Metal	Copper Alloy
Material - Plating Mating	Gold
Material - Plating Termination	Tin
Material - Resin	High Temperature Thermoplastic
Net Weight	3713.790/mg
Number of Rows	1
Orientation	Right Angle
PCB Locator	Yes
PCB Retention	Yes
PCB Thickness - Recommended	1.60mm
Packaging Type	Tray
Pitch - Mating Interface	0.80mm
Pitch - Termination Interface	0.80mm
Plating min - Mating	0.762µm
Plating min - Termination	3.810µm
Polarized to Mating Part	Yes
Polarized to PCB	Yes
Shrouded	No
Stackable	No
Temperature Range - Operating	-40° to +85°C
Termination Interface: Style	Through Hole

Electrical

Current - Maximum per Contact	1.0A

EU ELV
Compliant

EU RoHS
Compliant

China RoHS

REACH SVHC
Not Contained Per - D(2021)4569-DC (8 July 2021)

Halogen-Free Status
Low-Halogen

For more information, please visit Contact US

China ROHS	Green Image
ELV	Compliant
RoHS Phthalates	Not Contained

Search Parts in this Series
49616 Series

Mates With
HS AutoLink Cable Assembly 111014 , 111015 , 111005 , 111041 , 111019 , 111020

Voltage - Maximum	5V (RMS)

Material Info

Reference - Drawing Numbers

Packaging Specification	PK-49616-001-001
Product Specification	PS-49616-001-001
Sales Drawing	SD-49616-001-001

This document was generated on 02/01/2022

PLEASE CHECK WWW.MOLEX.COM FOR LATEST PART INFORMATION

Mouser Electronics

Authorized Distributor

Click to View Pricing, Inventory, Delivery & Lifecycle Information:

Molex:

49616-0711