REV.	DATE	DESCRIPTION
NC	08/29/99	INITIAL RELEASE

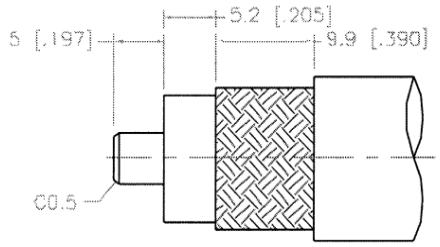

RECOMMENDED
CABLE STRIPPING DIM'S

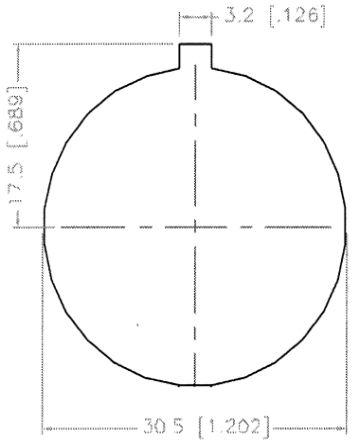

RECOMMENDED
MOUNTING HOLE

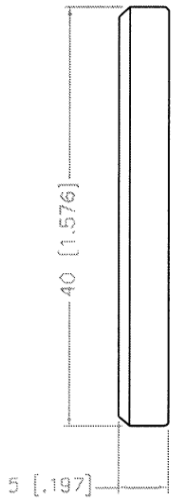

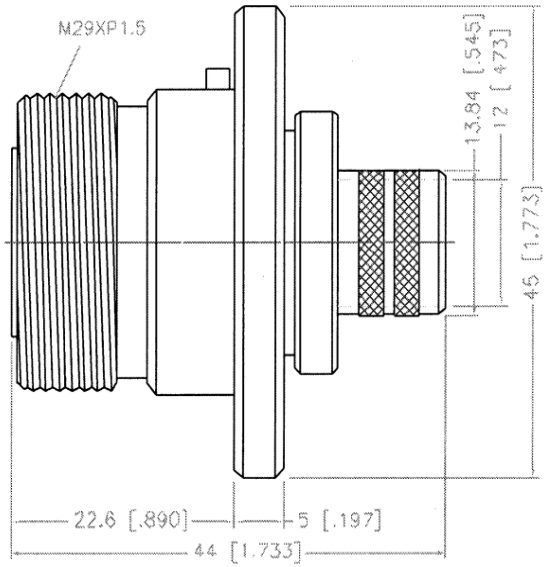

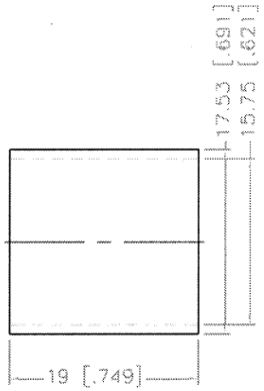

NOTES: FINISH (PLATING THICKNESS IN MICRO-INCHES)
1. BRASS PER QQ-B-626
2. SILVER PL. 120 MIN. THICK OVER COPPER STRIKE.
3. BERYLLIUM COPPER PER QQ-C-530.
4. SILVER PL. 200 MIN. THICK OVER COPPER STRIKE.
5. TEFLON MIL-P-19468

	DESCRIPTION	MATERIAL	FINISH
1	BODY	BRASS	SILVER
2	INSULATOR	TEFLON	NATURAL
3	CONTACT PIN	BER. COPPER	SILVER
4	FERRULE	COPPER	SILVER
5	NUT	BRASS	SILVER
6			
7			
8			

UNLESS OTHERWISE SPECIFIED DIMENSIONS ARE IN MILLIMETERS

DIMENSIONS IN [ ] ARE IN INCHES FOR CUSTOMER REFERANCE ONLY

UNLESS OTHERWISE SPECIFIED TOLERANCES FOR MILLIMETERS ARE:
0.5-6 = ± 0.2
6-30 = ± 0.4
30-120 = ± 0.6
120-315 = ± 1
315-1000 = ± 1.6
1000-2000 = ± 2.4

DO NOT SCALE DRAWING

APPROVALS		DATE
DRAWN	G.R.S.	08/29/99
CHECKED		
ISSUED		

connex
Connector Corporation

TITLE 7/16 CRIMP BULKHEAD JACK (FOR LMR600 CABLE)

SIZE	FSCM NO.	DWG. NO.	REV.
A	99001	272156.DWG	NC

SCALE	NA	PART NO.	272156	SHEET	1 OF 1