C-160 351-EE

USED ON

TERM. Nº	FINISH
160 351-1	None
160 351-2	Tinplated
160351-3	NONE ⚠

FOR USE ON STANDARD APPLICATORS (RIGHT-LEFT FEED) AND FOR USE ON MINIATURE APPLICATORS (LEFT-RIGHT FEED; AMP-O-MATIC APPLICATORS)

⚠ WITH PAPER LAYER

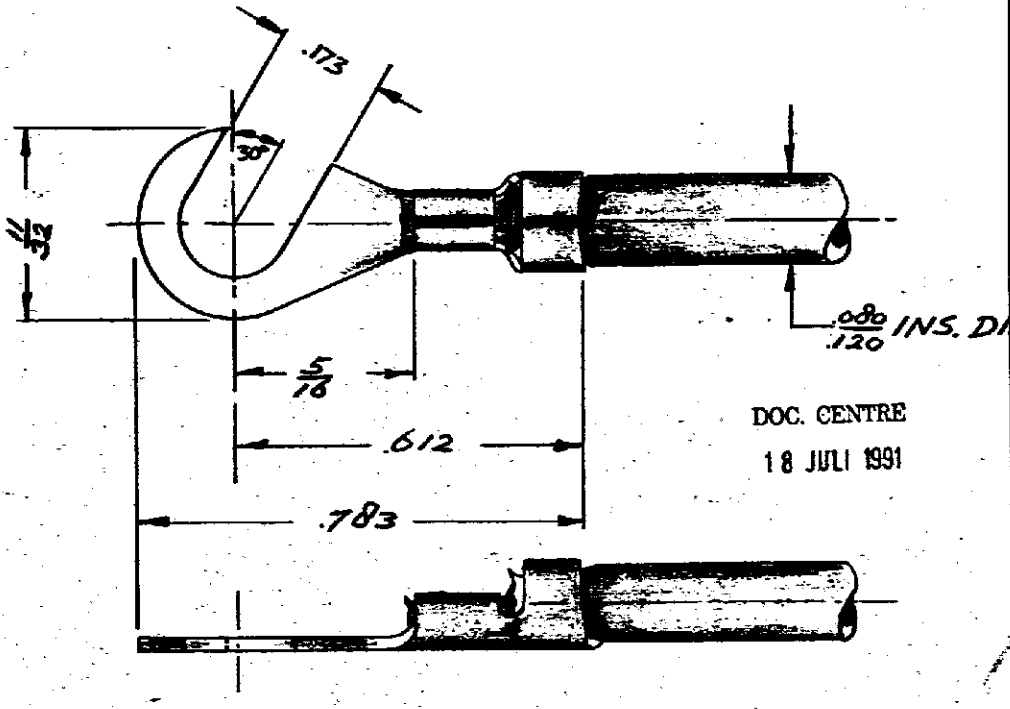

DOC. CENTRE
18 JULI 1991

MATERIAL: SEE TABLE

HEAT TREATMENT: —

FINISH: SEE TABLE

© AMP-Holland N.V. 1961

No.	ALTERATION	DATE	BY	N.D.C
A	REV. PER ECN 8936	26/6/62		

DR. F. HORVATH 14-III-61 TR. 17-3-61

AMP-HOLLAND N.V.
's-HERTOGENBOSCH, HOLLAND.

WIRE TERMINAL

CLASS Hook
TYPE AUTOMATIC
SIZE 20-16

TOLERANCES-ALL DIMENSIONS ± EXCEPT AS NOTED

SCALE: 4:1 C-160 351-EE