THIS DRAWING IS UNPUBLISHED. RELEASED FOR PUBLICATION ,19 .
© COPYRIGHT 19 BY AMP INCORPORATED. ALL RIGHTS RESERVED.

LOC	DIST
AA	22

REVISIONS

P	LTR	DESCRIPTION	DATE	DWN	APVD
	E	REV; EC 0G7A-0042-99	15FEB99	DLD	ECL
	F	REV PER 0S1B-0132-99	11/17/99	MM	DD
	G	REV PER 0S1B-0014-00	01/30/00	MM	DD
	H	REV PER 0S1B-0073-00	10MAR00	MM	DD

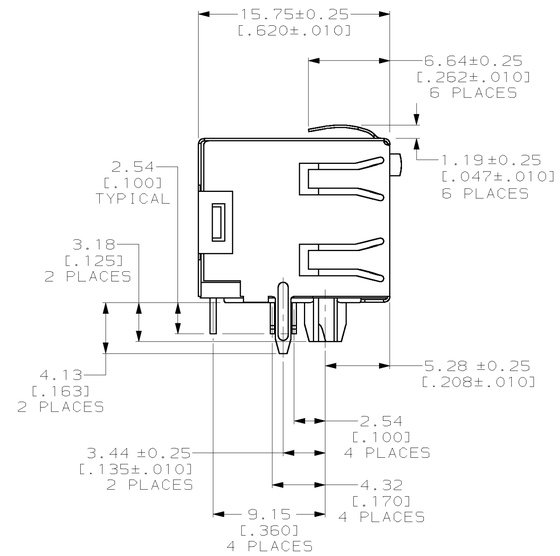

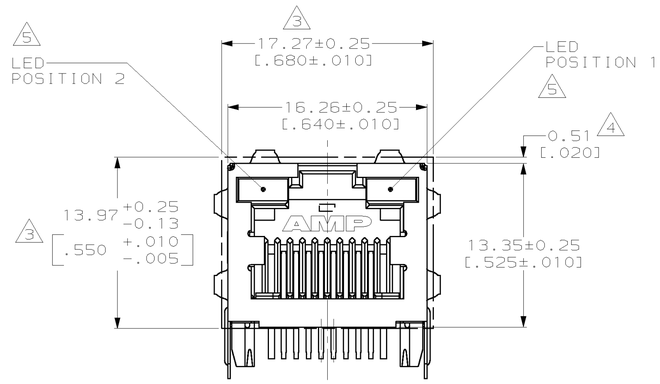

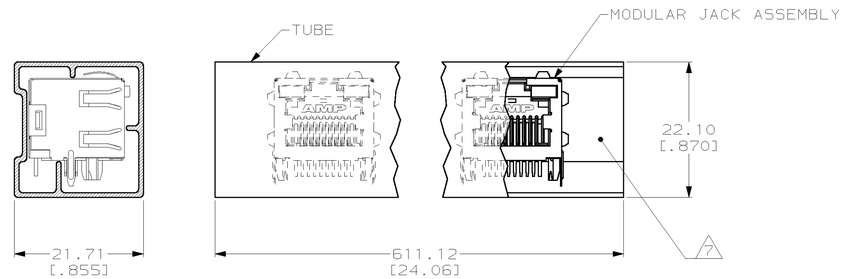

DETAIL A
TUBE PACKAGING
SCALE 2:1

1. MATERIAL: HOUSING - HIGH TEMPERATURE THERMOPLASTIC, BLACK, UL94V-0.
TERMINALS - .36[.014] THICK PHOS BRONZE PLATED WITH 3.81µm[.000150] MINIMUM THICK BRIGHT TIN LEAD IN SOLDER AREA. 1.27µm [.000050] MINIMUM GOLD IN LOCALIZED PLATE AREA. ENTIRE TERMINAL PLATED WITH 1.27µm [.000050] MINIMUM THICK NICKEL.
SHIELD - .196[.0077] THICK COPPER ZINC ALLOY PREPLATED WITH 2.03µm[.000080] - 3.81µm [.000150] THICK TIN LEAD OVER 2.54µm [.000100] THICK COPPER.
LIGHT EMITTING DIODE (LED) - DIFFUSED EPOXY LENS, .51 × .51[.020 × .020] CARBON STEEL WIREFRAME LEADS PREPLATED WITH 2.29µm[.000090] SILVER OVER 1.02µm[.000040] NICKEL UNDERPLATE OVER 2.03µm[.000080] COPPER UNDERPLATE. POST-PLATED WITH 6.35-13.97µm[.000250-.000550] THICK TIN-LEAD.

2. JACK CAVITY CONFORMS TO FCC RULES AND REGULATIIONS PART 68, SUBPART F.

3. SUGGESTED PANEL OPENING DIMENSIONS.

4. SUGGESTED CLEARANCE BETWEEN TOP OF CONNECTOR AND TOP PANEL OPENING.

4. SEE TABLE FOR COLOR OF LEDS AND NUMBER REQUIRED.

6. THIS MODULAR JACK WITH INTEGRATED LED IS NOT IR REFLOW SOLDERING PROCESS COMPATIBLE.

7. PACKAGED 30 PIECES PER TUBE, SEE DETAIL "A".

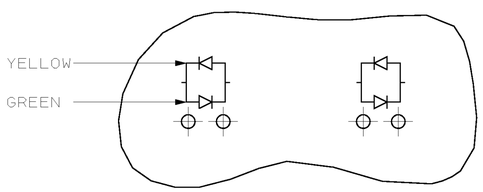

LED CURRENT DIAGRAM
406549-8 ONLY

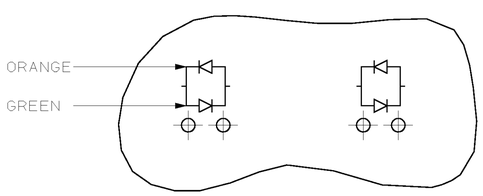

LED CURRENT DIAGRAM
406549-7 ONLY

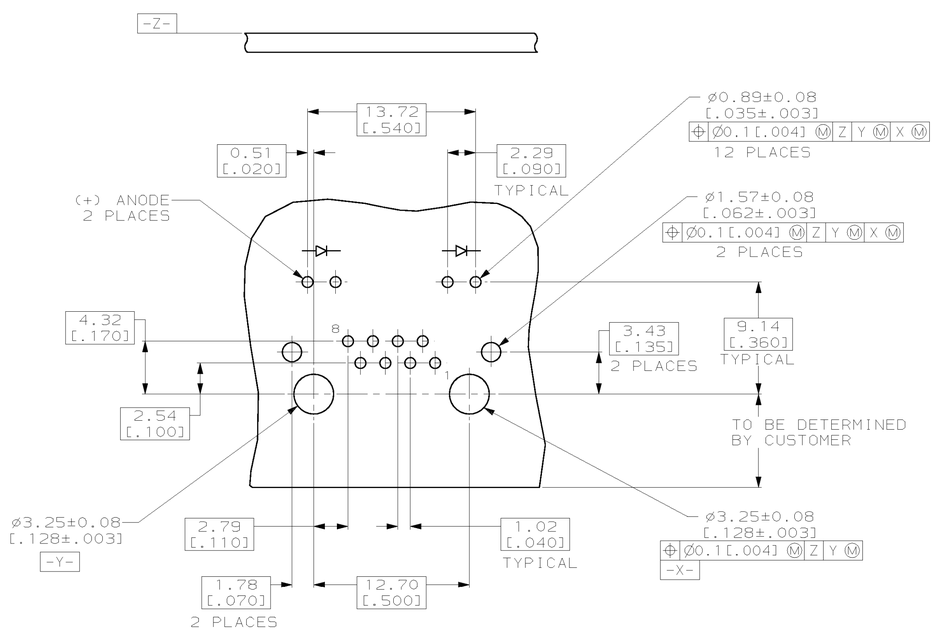

SUGGESTED PRINTED CIRCUIT BOARD LAYOUT
(COMPONENT SIDE)

7 TUBE	GREEN	YELLOW	7-406549-4
7 TUBE	YELLOW	GREEN	7-406549-1
TRAY	ORANGE/GREEN	GREEN	1-406549-8
TRAY	ORANGE/GREEN	YELLOW	406549-9
TRAY	YELLOW/GREEN	YELLOW/GREEN	406549-8
TRAY	ORANGE/GREEN	ORANGE/GREEN	406549-7
TRAY	YELLOW	YELLOW	406549-6
TRAY	GREEN	GREEN	406549-5
TRAY	GREEN	YELLOW	406549-4
TRAY	YELLOW	-	406549-3
TRAY	-	GREEN	406549-2
TRAY	YELLOW	GREEN	406549-1
PACKAGING	POSITION 2	POSITION 1	PART NUMBER
	INDICATOR COLOR		

THIS DRAWING IS A CONTROLLED DOCUMENT.

DIMENSIONS: mm [INCHES]

TOLERANCES UNLESS OTHERWISE SPECIFIED:
0 PLC ±-
1 PLC ±-
2 PLC ±0.25[.01]
3 PLC ±0.13[.005]
4 PLC ±-
ANGLES ±-

MATERIAL 1
FINISH 1

DWN G. GARRETT 17-SEP-97
CHK G. GARRETT 17-SEP-97
APVD M. DERSTINE 17-SEP-97

PRODUCT SPEC 108-1163-4
APPLICATION SPEC 114-2154
WEIGHT -

AMP Incorporated
Harrisburg, PA 17105-3608

NAME INVERTED MODULAR JACK ASSEMBLY, 1X1, SHIELDED, PANEL GROUND, LED

SIZE	CAGE CODE	DRAWING NO	RESTRICTED TO
A1	00779	C-406549	-

CUSTOMER DRAWING | SCALE 4:1 | SHEET 1 OF 1 | REV H