P/N	APPLICABLE NOTE(S)
-1CCSF	1,2

REVISIONS				
ZONE	REV	DESCRIPTION	DATE	BY
–	–	–	–	–

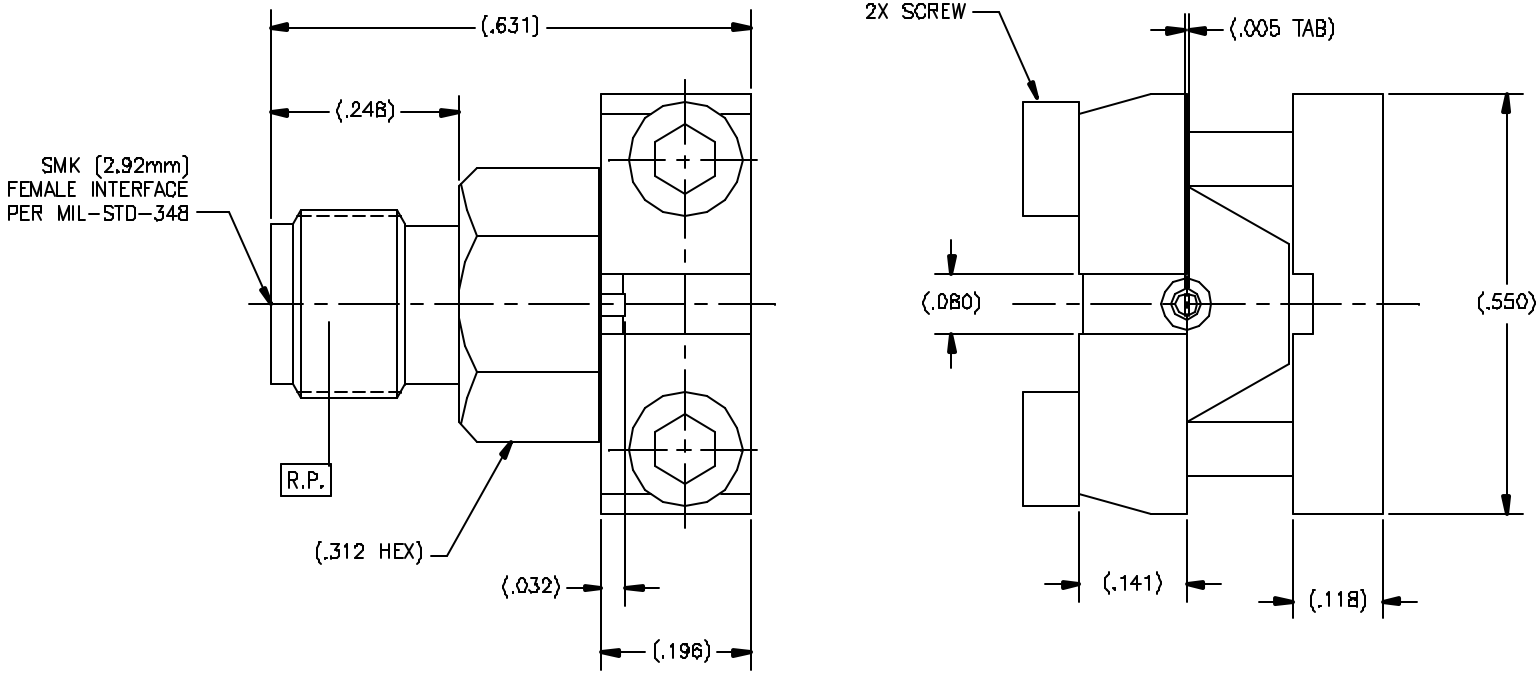

DRAWING NO.	REV.
248	–

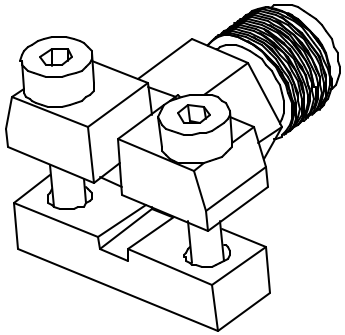

NOTE(S):

1. MATERIAL:
   1.1 BODY, PLATE & INSERT: 303 SST PER ASTM A-582
   1.2 CONTACT: BeCu ALLOY PER ASTM B-196
   1.3 INSULATOR: BEAD
2. FINISH:
   2.1 BODY, PLATE & INSERT: PASSIVATE PER ASTM A-967
   2.2 CONTACT: GOLD PLATE PER ASTM B-488 OVER NICKEL PLATE PER AMS-QQ-N-290.
   2.3 INSULATOR: NONE

TOLERANCES AND NOTES
EXCEPT AS NOTED
DIMENSIONS ARE IN INCHES
LINEAR .XX ±.010 .XXX ±.005 ANGULAR ± 1/2°
FRACTION ± 1/32

1. MACHINE FINISH 63 RMS
2. BREAK ALL SHARP EDGES .003 MAX.
3. MACHINED FILLETS .005 MAX.
4. MACHINED SURFACES SQUARE TO RESPECTIVE AXIS WITHIN .005 INCHES PER INCH.
5. MACHINED DIAMETERS CONCENTRIC WITHIN .002 T.I.R.
6. DIMENSIONS TO BE MET BEFORE PLATING.
7. CHAMFER ALL THREADS 45°.
8. THREADS PER H-28.
9. REMOVE FRAYED EDGES ON TEFLON.
10. REMOVE ALL BURRS.

NOTICE
THIS DRAWING EMBODIES A CONFIDENTIAL, PROPRIETARY DESIGN ORIGINATED BY TENSOLITE COMPANY AND ALL DESIGN, MANUFACTURING REPRODUCTION, USE AND SALE RIGHTS REGARDING THE SAME ARE EXPRESSLY RESERVED. IT IS SUBMITTED UNDER A CONFIDENTIAL RELATIONSHIP FOR A SPECIFIED PURPOSE AND THE RECIPIENT AGREES BY ACCEPTING THIS DRAWING FOR ITS SUPPLY OR PERFORM ANY INFORMATION REGARDING IT TO ANY UNAUTHORIZED PERSON OR TO INCORPORATE IN OTHER PROJECTS ANY SPECIAL FEATURES POPULAR TO THIS DESIGN. ALL PATENT RIGHTS HEREIN ARE EXPRESSLY RESERVED BY TENSOLITE COMPANY, LONG BEACH, CALIFORNIA 90815

SEE NOTES	–	SEE NOTES	–
MATERIAL	SIZE	SPECIFICATION	PROCUREMENT

NEXT ASSY

APPROVAL INITIALS		DATE
DRAWN BY	DKN	04.03.02
CHECKED		
QUALITY		
ENGINEERING	ATV	04.08.02

Tensolite RF/Microwave Connectors
Long Beach, California 90815

TITLE: SMK (2.92mm) FEMALE 2 HOLE MOUNT

SCALE	SUB-DRAWING/FORMAT	SHEET	OF
8:1	_CL_XX	1	1

SIZE	CODE IDENT	DRAWING NO.	REV.
C	30990	248	–