Wire Guard | Spacing 5.0 mm

AK130/..-5.0-GREY

Technical Data

Wire Sizes	
Solid min	0.14 mm²
solid max	2.5 mm²
Stranded (flexible) min	0.14 mm²
Stranded (flexible) max	1.5 mm²
Stranded with Ferrule min	0.14 mm²
Stranded with Ferrule max	1.5 mm²
Dimensions	
Stripped Length	6.0 mm
Materials	
Clamp	Brass
Screw	Steel
Contact Spring	Copper Alloy

Insulating Material	
Material	PA 6.6
Flammability Class	UL 94 V-0
Temperatures	
Operating Temperature	-30 °C - 105 °C
Wave Soldering Process	
Soldering Temperature, recommended	-
Peak Soldering Time, recommended	-
Reflow Process	
Soldering Temperature, recommended	-
Peak Soldering Time, recommended	-

Order Data (Spacing 5.0 mm)

Poles	Width (mm)	Article Designation	Article Number	PU
2	10.70	AK130/2-5.0-GREY	50130020001G	250
3	15.70	AK130/3-5.0-GREY	50130030001G	250
4	20.70	AK130/4-5.0-GREY	50130040001G	250
5	25.70	AK130/5-5.0-GREY	50130050001G	250
6	30.70	AK130/6-5.0-GREY	50130060001G	250
7	35.70	AK130/7-5.0-GREY	50130070001G	250
8	40.70	AK130/8-5.0-GREY	50130080001E	100
9	45.70	AK130/9-5.0-GREY	50130090001E	100
10	50.70	AK130/10-5.0-GREY	50130100001E	100
11	55.70	AK130/11-5.0-GREY	50130110001E	100
12	60.70	AK130/12-5.0-GREY	50130120001E	100

Accessories

Figure	Designation	Article Number
	Bridge, 2-pole, insulated, BRI/2-5.0/5.08-LIGHT GREY	50000000006
	Bridge, 3-pole, insulated, BRI/3-5.0/5.08-LIGHT GREY	50000000007
	Bridge, 2-pole, BR/2-5.0/5.08-L7.0	50000000008

Colours

	GREY , RAL7016
	GREEN, RAL6018
	BLUE, RAL5015
	LIGHT GREEN, similar RAL 6018

Colours according to RAL, there may be variations on colour due to production conditions.
Special colours on request.

Counterparts (Spacing 5.0 mm)

Pin Strip/Terminal Blocks

STL130	STL140	STL132

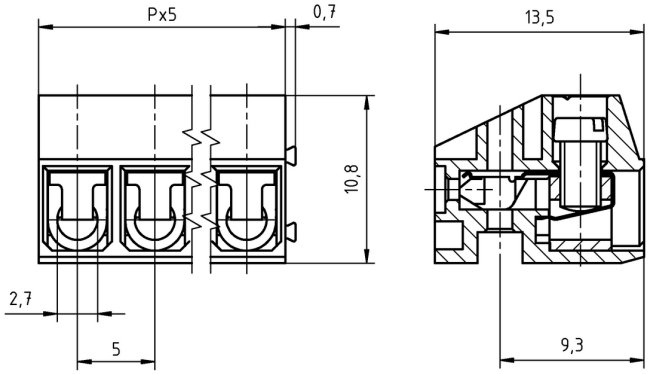

Ratings

Usegroup	B	C	D		
Rated Voltage	300 V	150 V	300 V	250 V	
Rated Current	8 A	8 A	8 A	7 A	
Overvoltage Category				III	
Rated Wire Size				min	max
solid	AWG 22-12	AWG 22-12	AWG 22-12	0.5 mm² (5 A)	2.5 mm² (8 A)
stranded	AWG 22-14	AWG 22-14	AWG 22-14	0.5 mm² (5 A)	1.5 mm² (7 A)
Torque	0.45 Nm	0.45 Nm	0.45 Nm	0.40 Nm	
Screw Size	M2.6	M2.6	M2.6	M2.6	
Test Voltage	1.6 kV	1.6 kV	1.6 kV	4.0 kV	
Pollution Degree				3	

PTR Messtechnik GmbH & Co. KG • Gewerbehof 38 • 59368 Werne / Germany
Phone: +49 (0)2389/7988-0 • Fax: +49 (0)2389/798888 • E-Mail:info@ptr.eu