P/N	"A" CABLE TYPE
−1CC	Ø .141 SEMI−RIGID CABLE
−1CCSF	Ø .141 SEMI−RIGID CABLE
−2CC	Ø .085 SEMI−RIGID CABLE
−2CCSF	Ø .085 SEMI−RIGID CABLE
−3CC	Ø .141 LOW LOSS CABLE
−3CCSF	Ø .141 LOW LOSS CABLE
−4CC	Ø .116 LOW LOSS CABLE
−4CCSF	Ø .116 LOW LOSS CABLE

REVISIONS

ZONE	REV.	DESCRIPTION(S)	DATE	BY
−	A	ECO 19539	08.31.06	DKN

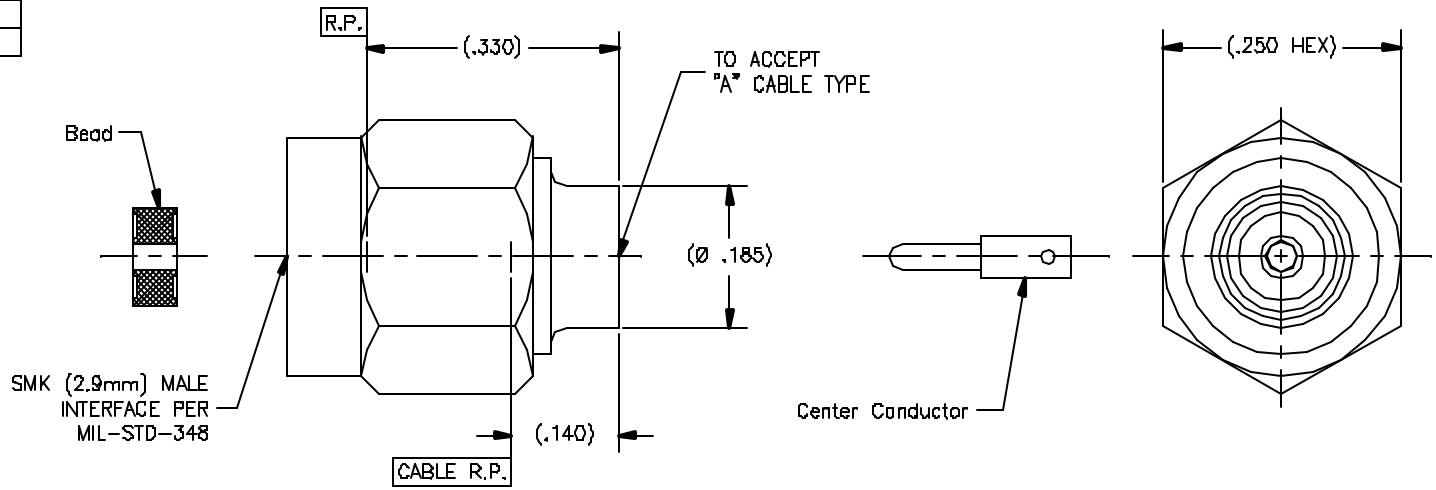

NOTE:

CENTER CONDUCTOR & BEAD TO BE PACKAGED AND SHIPPED UNASSEMBLED.

DRAWING NO. 243 REV. A

MATERIAL(S):

Body And Coupling Nut:
303 sst per ASTM A−582.
Center Conductor:
BeCu alloy per ASTM B−196.
Retaining Ring:
BeCu alloy per ASTM B−196
or ASTM B−197.
Gasket:
Silicone rubber per A−A−59588.
Bead:
(High Performance Application).

ELECTRICAL(S):

Impedance: 50 Ohms nominal.
Frequency Range: DC to 40.0 GHz.
VSWR: 1.3:1 Max to 40 GHz.
Insertion Loss: .50 dB max to 40 GHz.
Working Voltage: 500 Vrms max @ sea level.
Dielectric Withstanding Voltage: 1500 Vrms min.
R.F. HiPot Voltage: 1000 Vrms min @ 5MHz.
Corona Level: 375 Vrms @ 70,000 ft.
Insulation Resistance: 5000 MegOhms min.
R.F. Leakage: −(90 − fGHz).
Contact Resistance:
Initial:
Center Contact: 3.0 Milliohm max.
Outer Contact: 2.0 Milliohm max.
After Environment:
Center Contact: 4.0 Milliohm max.
Outer Contact: NA.

MECHANICAL(S):

Mating Characteristics:
Interface per Mil−Std−348.
Force To Engage & Disengage:
Torque: 2 inch−pounds max.
Longitudinal Force: NA.
Connector Durability:
500 cycles min @ 12 cycles/minute max.
Permeability: Less than 2.0 mu.
Coupling Proof Torque: 15 inch−pounds min.
Coupling Mech. Retention: 60 pounds min.

ENVIRONMENTAL(S):

Temperature Range: −65°C to +165°C.
Thermal Shock:
Mil−Std−202, Method 107, Test Cond. B.
Moisture Resistance:
Mil−Std−202, Method 106, Insulation resistance at least 200 MegOhms within 5 minutes after removal from humidity.
Corrosion:
Mil−Std−202, Method 101, Test Cond. B.
Vibration:
Mil−Std−202, Method 204, Test Cond. B.
Shock:
Mil−Std−202, Method 213, Test Cond. I.

FINISH(ES):

Coupling Nut:
(for CCSF's): Passivate per ASTM A−967.
(for CC's): Gold plate per ASTM B−488,
over nickel under plate per AMS−QQ−N−290.
Body & Center Conductor:
Gold plate per ASTM B−488, over nickel under plate per AMS−QQ−N−290.

APPLICABLE TENSOLITE DOCUMENTS

WORK STD	PROD INST	ASSY INST
NA	NA	NA

NOTICE
THIS DRAWING INCLUDES A CONFIDENTIAL, PROPRIETARY DESIGN GENERATED BY TENSOLITE COMPANY AND ALL DESIGN, MANUFACTURING REPRODUCTION, USE AND SALE RIGHTS REGARDING THE SAME ARE EXPRESSLY RESERVED. IT IS SUBMITTED UNDER A CONFIDENTIAL RELATIONSHIP FOR A SPECIFIC PURPOSE AND THE RECIPIENT AGREES BY ACCEPTING THE DRAWING NOT TO SUPPLY OR DISCLOSE ANY INFORMATION REGARDING IT TO ANY UNAUTHORIZED PERSON TO INCORPORATE IN OTHER PRODUCTS ANY SPECIAL FEATURES PECULIAR TO THIS DESIGN. ALL PATENT RIGHTS HERETO ARE EXPRESSLY RESERVED BY TENSOLITE COMPANY, LONG BEACH, CALIFORNIA 90815.

TOLERANCES AND NOTES
EXCEPT AS NOTED
DIMENSIONS ARE IN INCHES
LINEAR .XX ±.010 .XXX ±.005 ANGULAR ± 1/2°
FRACTION ± 1/64
1. MACHINE FINISH 63 RMS
2. BREAK ALL SHARP EDGES .003 MAX.
3. MACHINED FILLETS .005 MAX.
4. MACHINED SURFACES SQUARE TO RESPECTIVE AXIS WITHIN .005 INCHES PER INCH.
5. MACHINED DIAMETERS CONCENTRIC WITHIN .002 TIR.
6. DIMENSIONS TO BE MET BEFORE PLATING.
7. DRAW FOR ALL TAPERS 10°.
8. THREADS PER H−28.
9. REMOVE FRAYED EDGES ON TEFLON.
10. REMOVE ALL BURRS.

MATERIAL	SIZE	SPECIFICATION	PROCUREMENT
−	−	−	−

NEXT ASSY

APPROVAL INITIALS		DATE
DRAWN BY	DKN	06.12.02
CHECKED		
QUALITY		
ENGINEERING	PMAO	09.01.06

Tensolite
HIGH PERFORMANCE CABLES
& INTERCONNECT SYSTEMS
Long Beach, California 90815

TITLE SMK (2.92mm) MALE STRAIGHT TO SEMI−RIGID CABLE

SCALE 8:1 SUB−DRAWING/FORMAT CL_\ SHEET 1 OF 1

SIZE C CODE IDENT 30990 DRAWING NO. 243 REV. A