THIS DRAWING IS UNPUBLISHED. RELEASED FOR PUBLICATION -,- .
© COPYRIGHT - TE Connectivity Ltd. ALL RIGHTS RESERVED.

REVISIONS

P	LTR	DESCRIPTION	DATE	DWN	APVD
	E1	REVISED PER ECO-18-011228	16JUL2018	RS	DS

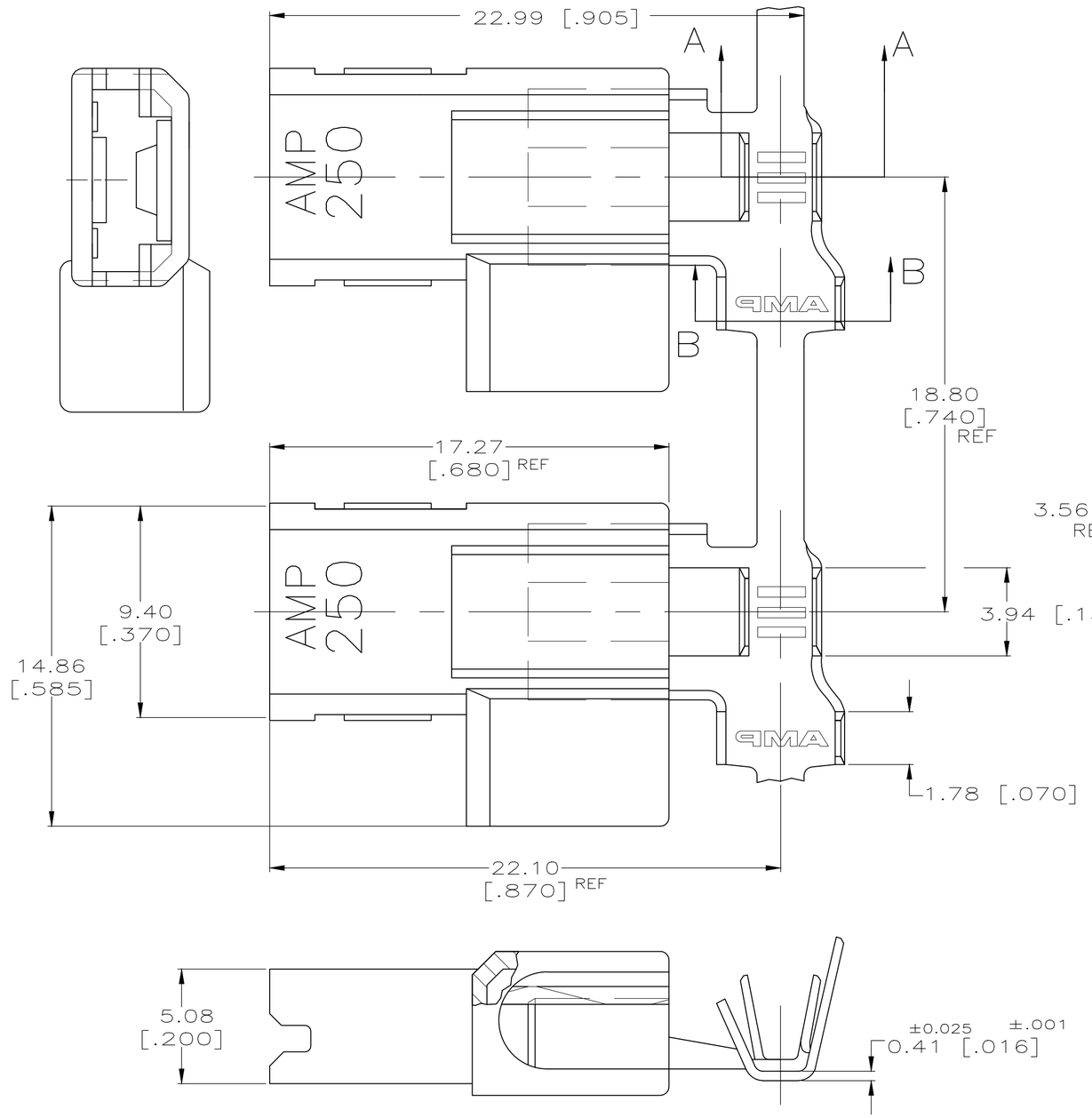

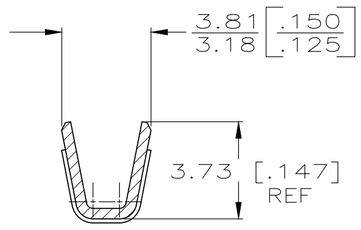

SECTION A–A

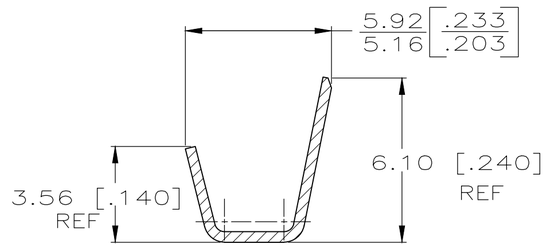

SECTION B–B

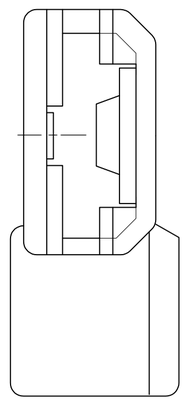

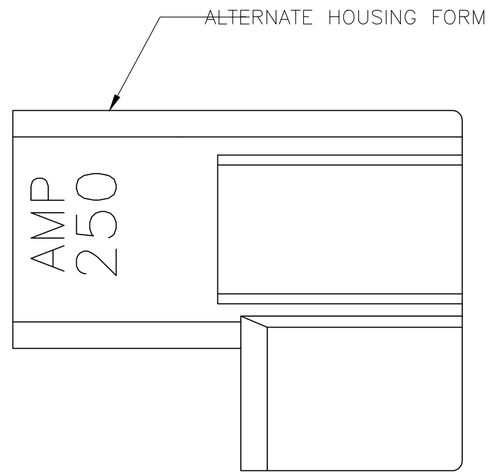

1. BUDGET FLAG FASTON TERMINALS, BASE P/N 63559, ARE USED IN THIS PRODUCT.
2. WIRE SIZE [#18–#14] AWG.
3. INSULATION RANGE IS 2.79–4.06[.110–.160] DIA.
4. PRELIMINARY – NOT FOR PRODUCTION
5. OFFERED FOR CONSIDERATION IN APPLICATIONS REQUIRING "NON–DRIP" HOUSING MATERIAL.
6. AGENCY APPROVAL IS PENDING.
7. OBSOLETE PARTS

	PACKAGING	HOUSING MATERIAL	TERMINAL FINISH – MATERIAL	PART NO
	–	P/N 2136700-9	TIN PLATED – 4M BRASS	521716-4
4	–		PLAIN 4M BRASS	521716-3
7 SUPERSEDED BY 521716-4	STANDARD	P/N 17066-1	TIN PLATED – 4M BRASS	~~521716-2~~
7 SUPERSEDED BY 521716-3	STANDARD		PLAIN – 4M BRASS	~~521716-1~~ 4

THIS DRAWING IS A CONTROLLED DOCUMENT.

DIMENSIONS: mm [INCHES]

TOLERANCES UNLESS OTHERWISE SPECIFIED:
0 PLC ± –
1 PLC ± –
2 PLC ± –
3 PLC ± 0.25 [.010]
4 PLC ± –
ANGLES ± –

MATERIAL: SEE TABLE
FINISH: SEE TABLE

DWN R FLAIG 23MAR2004
CHK K YI 23MAR2004
APVD K YI 23MAR2004
PRODUCT SPEC 108-1285
APPLICATION SPEC 114-2124
WEIGHT –

TE Connectivity Ltd.

NAME: ASSEMBLY, RECEPTACLE, FLAG, ULTRA-POD, 6.35 [.250] SERIES –

SIZE	CAGE CODE	DRAWING NO	RESTRICTED TO
A2	00779	C-521716	–

CUSTOMER DRAWING | SCALE 6:1 | SHEET 1 OF 1 | REV E1

521716

1471-9 (1/15)