High-Reliability Multipurpose Wide-Band Power Amplifier

The CA3020A Slash (/) Series types are supplied in the 12-lead TO-5 style package.

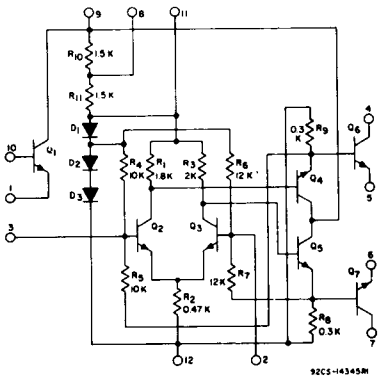

Schematic diagram.

TABLE A. POST BURN-IN, FINAL ELECTRICAL AND GROUP A SAMPLING TESTS

CHARACTERISTIC	SYMBOL	TEST CONDITIONS DC SUPPLY VOLTAGE		LIMITS FOR INDICATED TEMP.(°C) MINIMUM			MAXIMUM			UNITS
		V^+_1 ▲	V^+_2 ▲	−55	+25	+125	−55	+25	+125	
STATIC										
Collector-to-Emitter Breakdown Voltage, Q_6 & Q_7 at 10 mA	$V_{(BR)CER}$	–	–	–	25	–	–	–	–	V
	$V_{(BR)CEO}$	–	–	–	21	–	–	–	–	
Collector-to-Emitter Breakdown Voltage, Q_1 at 0.1 mA	$V_{(BR)CEO}$	–	–	–	10	–	–	–	–	V
Peak Output Currents, Q_6 & Q_7	I_4PK I_7PK	9 V	2 V	–	180	–	–	–	–	mA
Cutoff Currents, Q_6 & Q_7	$I_4Cutoff$ $I_7Cutoff$	9 V	2 V	–	–	–	–	1	–	mA
Differential Amplifier Current Drain	I^+_1	9 V	9 V	5.5	6.3	3.5	16.5	12.5	10	mA
Total Current Drain	$I^+_1 + I^+_2$	9 V	9 V	6	14	8	51	30	25	mA
Q_1 Cutoff (Leakage) Currents: Collector-to-Emitter	I_{CEO}	10 V	–	–	–	–	–	100	–	μA
Emitter-to-Base	I_{EBO}	3 V	–	–	–	–	–	0.1	–	μA
Collector-to-Base	I_{CBO}	3 V	–	–	–	–	–	0.1	–	μA
Forward Current Transfer Ratio, Q_1 at 3 mA	h_{FE1}	6 V	–	–	30	–	–	–	–	
DYNAMIC										
Maximum Power Output, R_{CC} = 200 Ω	$P_{O(Max.)}$	9 V	12 V	–	800	–	–	–	–	mW
Sensitivity for P_{OUT} = 800 mW	e_{In}	9 V	12 V	–	–	–	–	100	–	mV

CA3020A/...

TABLE B. DELTA LIMITS *at T_A = 25° C (/1 only)*

CHARACTERISTIC	SYMBOL	TEST CONDITIONS		LIMITS	UNITS
		V^+_1▲	V^+_2▲	Max.Δ	
Peak Output Currents, Q_6 & Q_7	I_4PK, I_7PK	9 V	2 V	±15	mA
Cutoff Currents, Q_6 & Q_7	I_4 Cutoff I_7 Cutoff	9 V	2 V	±0.1	mA
Differential Amplifier Current Drain	I^+_1	9 V	9 V	±1.3	mA
Total Current Drain	$I^+_1 + I^+_2$	9 V	9 V	±3	mA

▲ V^+_1 is the collector voltage applied to Q_1 through Q_5
V^+_2 is the collector voltage applied to Q_6 and Q_7

TABLE C. GROUPS C AND D END-POINT TESTS *at T_A = 25° C*

CHARACTERISTIC	SYMBOL	TEST CONDITIONS		LIMITS		UNITS
		V^+_1▲	V^+_2▲	MIN.	MAX.	
Peak Output Currents, Q_6 & Q_7	I_4PK I_7PK	9 V	2 V	180	–	mA
Cutoff Currents, Q_6 & Q_7	I_4Cutoff I_7Cutoff	9 V	2 V	–	1	mA
Differential Amplifier Current Drain	I^+_1	9 V	9 V	6.3	12.5	mA
Total Current Drain	$I^+_1 + I^+_2$	9 V	9 V	14	30	mA
Sensitivity for P_{OUT} = 800 mW	e_{IN}	9 V	12 V	–	100	mV

▲ V^+_1 is the collector voltage applied to Q_1 through Q_5
V^+_2 is the collector voltage applied to Q_6 and Q_7

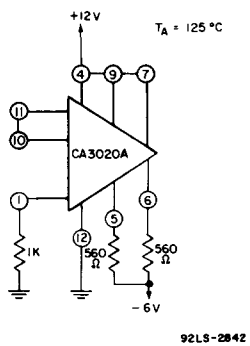

Burn-in and operating life test circuit.